Setup Guide

USO-HA

High Availability Unified SAN + NAS + S3 Storage System

2x 2U Storage Controllers

24-bay 4U HA RAID Array

12-bay 2U Storage Expansion Unit

© 2022 StoneFly, Inc. | All Rights Reserved

This Page is intentionally left blank.

Copyright © 2006-2022 StoneFly, Inc.

All rights are reserved. No part of this document may be photocopied or reproduced without the prior written consent of StoneFly.

The information contained in this document is subject to change without notice. StoneFly shall not be liable for errors contained herein or for consequential damages in connection with the furnishing, performance, or use of this material.

StoneFly, the StoneFly logo, Storage Concentrator, Integrated Storage Concentrator, ISC, Modular Storage Concentrator, StoneFly Backup Advantage, StoneFusion, StoneFly Replicator CDP, ValueSAN, Unified Scale Out, USO, Super Scale Out, SSO, Twin Scale Out, TSO, Unified Storage & Server, USS, Unified Deduplicated Storage, UDS, Unified Encrypted Storage, UES, OptiSAN, StoneFly Voyager, DR365, DR365 Fusion, StoneFly Mirroring, Storage Concentrator Virtual Machine, SCVM, Software-Defined Unified Storage, SDUS, and StoneFly Cloud Drive are property of StoneFly, Inc.

Other brands and their products are trademarks or registered trademarks of their respective holders.

Contents

1.1 *Introduction* 5
1.1.1 Icons 7
1.1.2 System diagram and description 7
1.1.3 Contacting StoneFly for Help 8
2.1 Mounting the Equipment 10
2.1.1 2U Storage Concentrator Rack Installation Instructions 10
2.1.2 HA RAID Storage Expansion Array / HA Expansion Unit Rack Installation Instructions 16
2.2 Safety Reminders 22
3.1 Cabling the Equipment 24
3.1.1 Powering On Procedure 29
3.1.2 Powering Down the USO-HA Appliance 30
4.1 HA RAID Storage Expansion Array IP Address Configuration 33
4.1.1 Serial port setup 34
4.1.2 Web GUI IP Address setup 38
4.2 Configuring IPMI KVM 41
Accessing the IPMI Interface 44
4.3 Configuring the Network Settings for the USO's Management Port 47
4.4 Initial Configuration of Stonefly USO Appliance 49

© 2022 StoneFly, Inc. | All Rights Reserved.

Chapter-1: Introduction

© 2022 StoneFly, Inc. | All Rights Reserved.

1.1 *Introduction*

This document is aimed for system administrators who would like to know how to get started with StoneFly Unified Scale Out – High Availability (USO-HA) Appliance. It describes initial steps for launching the appliance.

The StoneFly USO-HA appliance provides a powerful Storage solution that can Scale Out Storage capacity while scaling up performance. Active-active cluster nodes coupled with Storage subsystems featuring active-active hot-swappable RAID controllers, hot-swappable disk drives and power supplies provide the utmost in high-availability.

This guide gives an overview of the product, rack mounting instructions and initial installation procedure. Information for using the features of the StoneFusion software is found in the Storage Concentrator User Guide on the included CD.

StoneFly Resource Library:

https://stonefly.com/resources

The StoneFly StoneFusion™ Webpage:

https://stonefly.com/stonefusion-bare-metal

Each StoneFly USO-HA comes preconfigured with StoneFly Stonefusion™ Bare-metal Storage Controller on each cluster node.

StoneFly USO-HA is made of three or more parts: Two Converged StoneFly Storage Concentrator (SC) appliances and one or more StoneFly HA RAID Storage Expansion Arrays.

StoneFly USO-HA supports the following SC cluster appliances:

- Dual 1U Storage Concentrator Cluster, Quad 12Gb SAS Connection
- Dual 2U Storage Concentrator Cluster, Quad 12Gb SAS Connection
- Dual 1U Storage Concentrator Cluster, Quad 16Gb FC Connection
- Dual 2U Storage Concentrator Cluster, Quad 16Gb FC Connection

USO-HA 2U Storage Concentrator (with bezel)

© 2022 StoneFly, Inc. | All Rights Reserved.

The StoneFly USO-HA can be configured with the following StoneFly HA RAID Storage Expansion Arrays:

- 12-bay / 2U 12Gb SAS HA RAID Storage Expansion Array (12 x 3.5” SAS drives)
- 16-bay / 3U 12Gb SAS HA RAID Storage Expansion Array (16 x 3.5” SAS drives)
- 24-bay / 4U 12Gb SAS HA RAID Storage Expansion Array (24 x 3.5” SAS drives)
- 24-bay / 2U 12Gb SAS HA RAID Storage Expansion Array (24 x 2.5” SAS drives)

- 12-bay / 2U 16Gb FC HA RAID Storage Expansion Array (12 x 3.5” SAS drives)
- 16-bay / 3U 16Gb FC HA RAID Storage Expansion Array (16 x 3.5” SAS drives)
- 24-bay / 4U 16Gb FC HA RAID Storage Expansion Array (24 x 3.5” SAS drives)
- 24-bay / 2U 16Gb FC HA RAID Storage Expansion Array (24 x 2.5” SAS drives)

StoneFly HA RAID Storage Expansion Arrays can be connected to the following StoneFly HA Expansion Units:

- 12-bay / 2U 12Gb SAS HA Expansion Unit (12 x 3.5” SAS drives)
- 16-bay / 3U 12Gb SAS HA Expansion Unit (16 x 3.5” SAS drives)
- 24-bay / 2U 12Gb SAS HA Expansion Unit (24 x 2.5” SAS drives)
- 60-bay / 4U 12Gb SAS HA Expansion Unit (60 x 3.5” SAS drives – one drawer)
- 60-bay / 4U 12Gb SAS HA Expansion Unit (60 x 3.5” SAS drives – two drawers)

24-bay / 4U 12Gb SAS HA RAID Storage Expansion Array

© 2022 StoneFly, Inc. | All Rights Reserved.

1.1.1 Icons

Icon	Type	Description
	Note	Special instructions or information
	Warning	Risk of system damage or a loss of data

1.1.2 System diagram and description

The figure below is a network interconnection diagram for the StoneFly USO-HA appliance. It consists of two StoneFly Converged Storage Concentrator (SC) cluster nodes. The diagram also includes shared a StoneFly HA RAID Storage Expansion Array with dual active-active hardware RAID controllers with failover and failback.

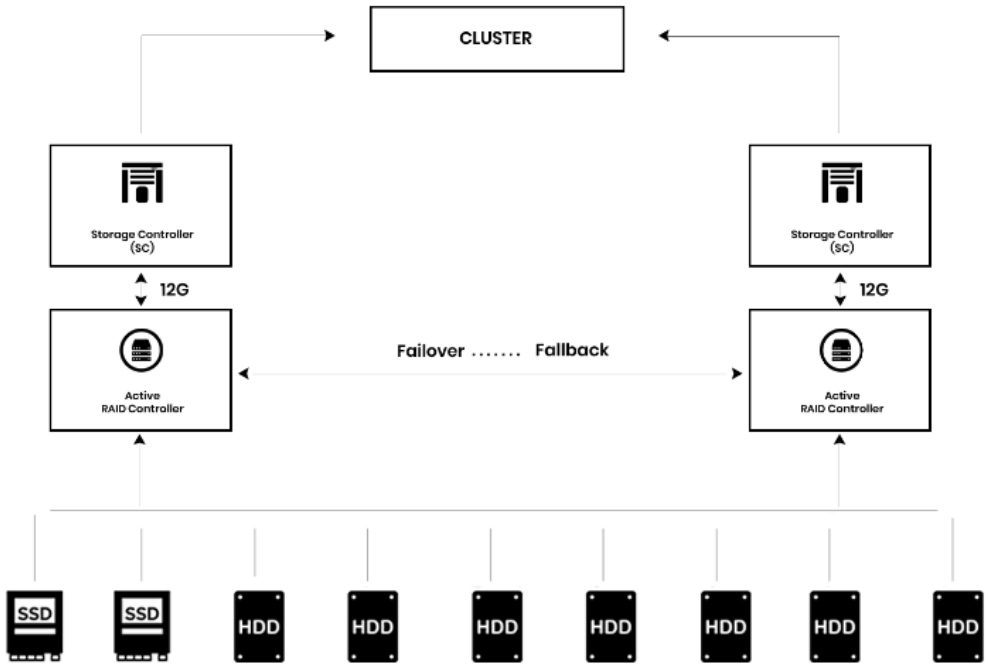

StoneFly USO-HA Network Interconnection

© 2022 StoneFly, Inc. | All Rights Reserved.

1.1.3 Contacting StoneFly for Help

Please have the following information available when contacting StoneFly technical support for assistance:

Model Number: _____ _____

Serial Number(s): D500 _ _ _ _

Software Version: _____ _____

Initiators: _____ _____

Storage: _____ _____

To contact StoneFly call 510.265.1616 (Select support from the menu). Our technical support is available 24 hours a day and 7 days a week. You can also contact us via email at support@stonefly.com

© 2022 StoneFly, Inc. | All Rights Reserved.

Chapter-2: Initial Installation

© 2022 StoneFly, Inc. | All Rights Reserved.

2.1 Mounting the Equipment

The USO-HA appliance is comprised of at least two StoneFly Converged SCs and one HA RAID Storage Expansion Array. Depending on which model you purchased, the interconnects between the SCs and the HA RAID Storage Expansion Array will be either SAS or FC. The SAS cables connecting the SCs with the HA RAID Storage Expansion Arrays and optional HA Expansion Units are short. When mounting the units, you should make sure that the units are rack mounted close to each other.

The following installation process describes how you can mount two 1U SC appliances and a standard 2U HA RAID Storage Expansion Array.

To ensure proper installation and functionality of the StoneFly appliance, please observe the following warnings:

- Wear an anti-static wristband before and during the installation procedure.
- It is recommended to plug the system into two different power sources (eg. into a power outlet and another into a UPS).
- Ensure the rack which the enclosure will be mounted onto has proper grounding and over-current protection.
- Do not obstruct ventilation openings; provide 20cm of free space at the front and back of the enclosure for air circulation; keep the ambient temperature below 35 degrees Celsius.

2.1.1 2U Rack Installation Instructions

This section provides information on installing the 2U appliance(s) into a rack or cabinet with the rails provided. There are a variety of rack/cabinet units on the market, which may mean that the assembly procedure will differ slightly. You should also refer to the installation instructions that came with the rack unit you are using.

NOTE: This rail will fit a rack/cabinet between 26" and 33.5" deep.

© 2022 StoneFly, Inc. | All Rights Reserved.

Identifying the Sections of the Rack Rails

The StoneFly appliance chassis package includes two rack rail assemblies in the rack mounting kit. Each assembly consists of three sections: an inner rail that secures directly to the chassis, an outer rail that secures to the rack, and a middle rail which extends from the outer rail. These assemblies are specifically designed for the left and right side of the chassis.
e

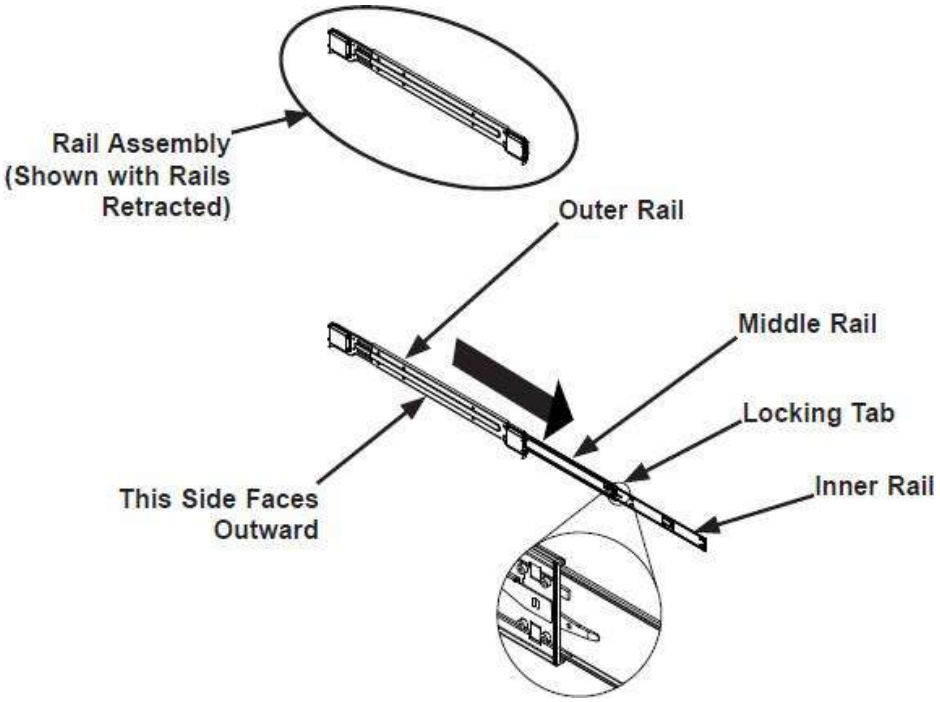

Identifying the Outer Rail, Middle Rail and Inner Rail

(Left Rail Assembly Shown)

© 2022 StoneFly, Inc. | All Rights Reserved.

Releasing the Inner Rail

Each inner rail has a locking latch. This latch prevents the server from coming completely out of the rack when the chassis is pulled out for servicing. To mount the rail onto the chassis, first release the inner rail from the outer rails.

Releasing the Inner Rail from the Outer Rails:

1. Pull the inner rail out of the outer rail until it is fully extended as illustrated below.
2. Press the locking tab down to release the inner rail.
3. Pull the inner rail all the way out.
4. Repeat for the other outer rail.

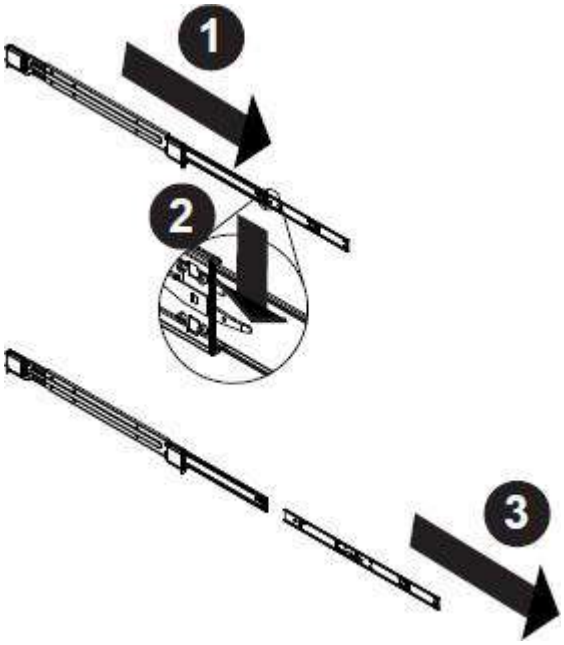

Extending and Releasing the Inner Rail

© 2022 StoneFly, Inc. | All Rights Reserved.

Installing the Inner Rails on the Chassis

Installing the Inner Rails

1. Identify the left and right inner rails. They are labeled.
2. Place the inner rail firmly against the side of the chassis, aligning the hooks on the side of the chassis with the holes in the inner rail.
3. Slide the inner rail forward toward the front of the chassis until the quick release bracket snaps into place, securing the rail to the chassis.
4. Optionally, you can further secure the inner rail to the chassis with a screw.
5. Repeat for the other inner rail.

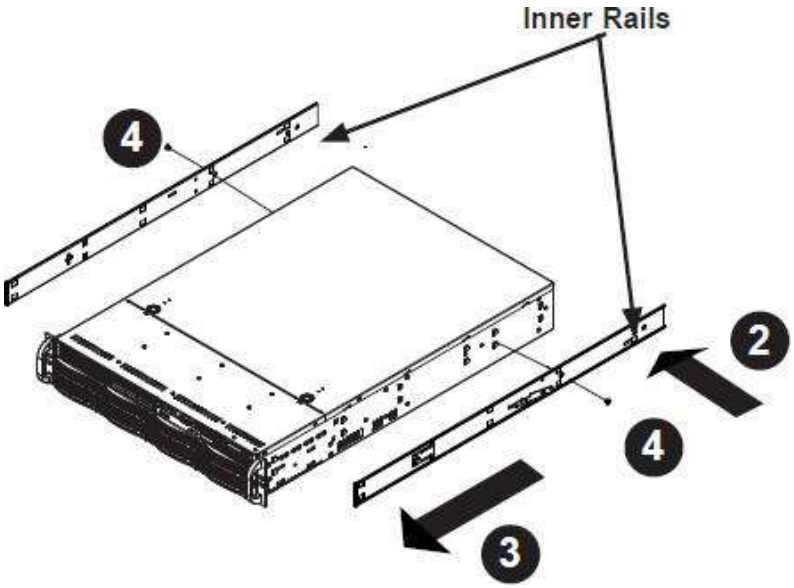

Installing the Inner Rails

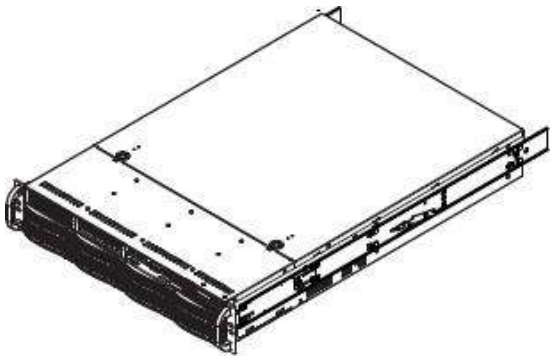

Inner Rails Installed on the Chassis

© 2022 StoneFly, Inc. | All Rights Reserved.

Installing the Outer Rails onto the Rack

Installing the Outer Rails

1. Press upward on the locking tab at the rear end of the middle rail.
2. Push the middle rail back into the outer rail.
3. Hang the hooks on the front of the outer rail onto the square holes on the front of the rack. If desired, use screws to secure the outer rails to the rack.
4. Pull out the rear of the outer rail, adjusting the length until it just fits within the posts of the rack.
5. Hang the hooks of the rear section of the outer rail onto the square holes on the rear of the rack. Take care that the proper holes are used so the rails are level. If desired, use screws to secure the rear of the outer rail to the rear of the rack.

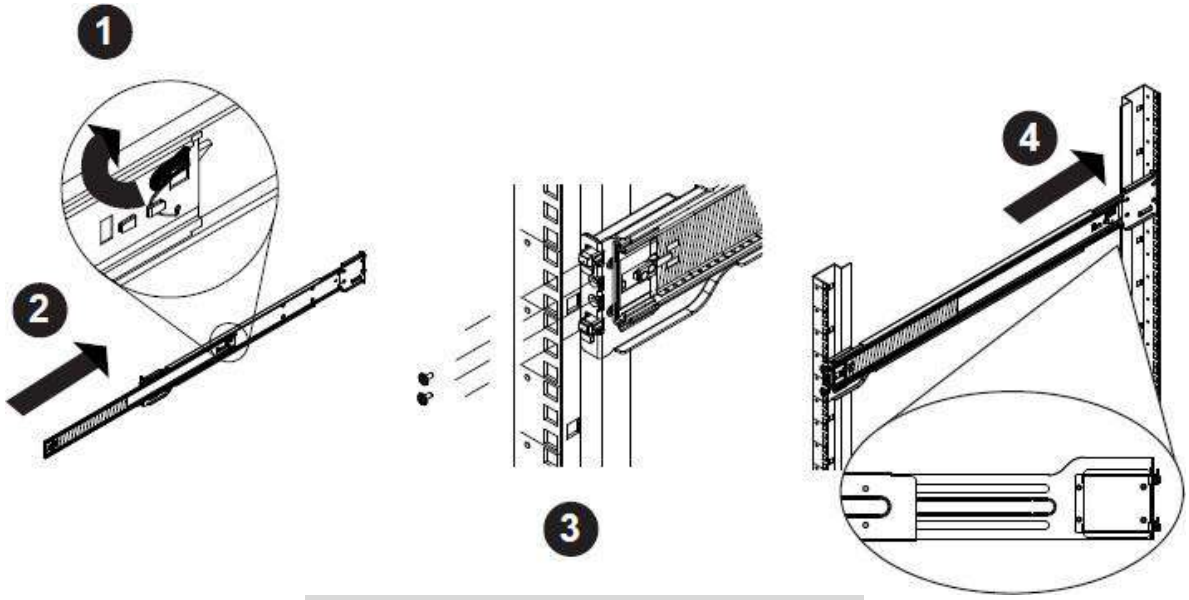

Extending and Mounting the Outer Rails

The rack stabilizing mechanism must be in place, or the rack must be bolted to the floor before you slide the unit out for servicing.

Failure to stabilize the rack can cause the rack to tip over. Do not use a two post “telco” type rack.

© 2022 StoneFly, Inc. | All Rights Reserved.

Sliding the Chassis onto the Rack Rails

Warning: Mounting the system into the rack requires at least two people to support the chassis during installation. Please follow the safety recommendations printed on the rails.

Installing the Chassis into a Rack

1. Extend the outer rails as illustrated above.
2. Align the inner rails of the chassis with the outer rails on the rack.
3. Slide the inner rails into the outer rails, keeping the pressure even on both sides. When the chassis has been pushed completely into the rack, it should click into the locked position.
4. Optional screws may be used to hold the front of the chassis to the rack.

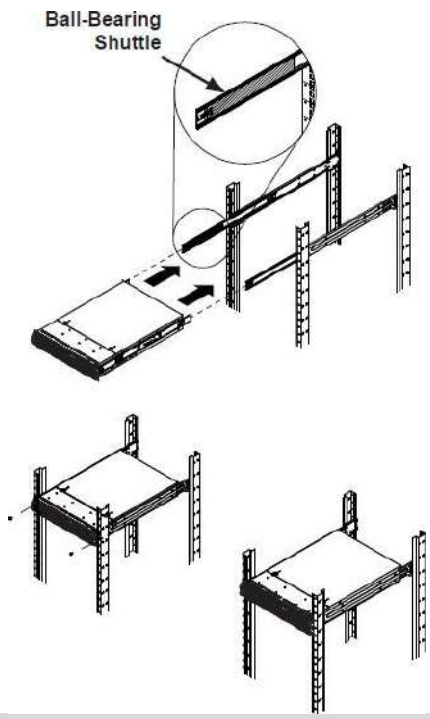

Installing the Chassis into a Rack

Note: The figure above is for illustrative purposes only. Always install servers to the bottom of the rack first.

Caution: Do not pick up the server with the front handles. They are designed to pull the system from a rack only.

© 2022 StoneFly, Inc. | All Rights Reserved.

2.1.2 HA RAID Storage Expansion Array / HA Expansion Unit Rack Installation Instructions

Rack Ear Mount Kit

The following table shows all accessories that came with the rack ear mount kit.

Kit Contents

Item	Description	Quantity
01	Mounting bracket assembly, left-side	1
02	Mounting bracket assembly, right-side	1
03	Hexagon washer screws #6-32mm	8
04	Truss head screws M5 x 9.0mm	4
05	M5 cage nuts	4
06	M5 x 25mm	4
07	M6 x 25mm	4
08	#10-32 x 25.4mm	4

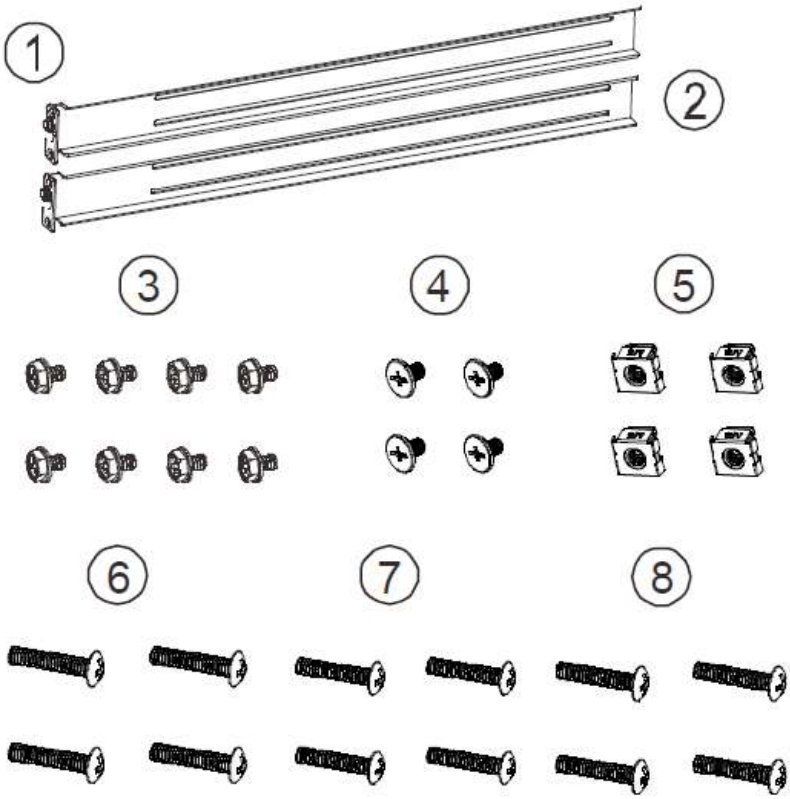

© 2022 StoneFly, Inc. | All Rights Reserved.

Installation Procedure

The installation begins with determining the installation position and M5 cage nut (9) insertion locations.

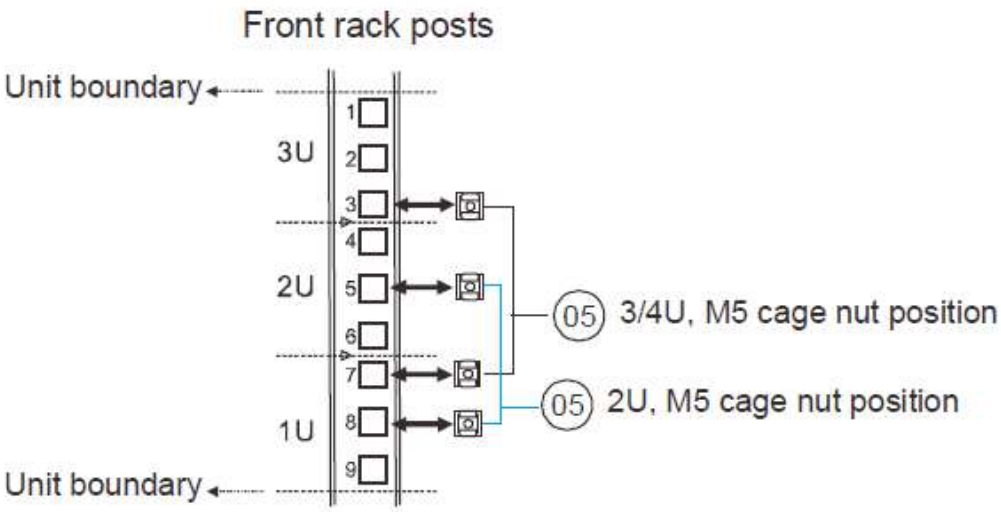

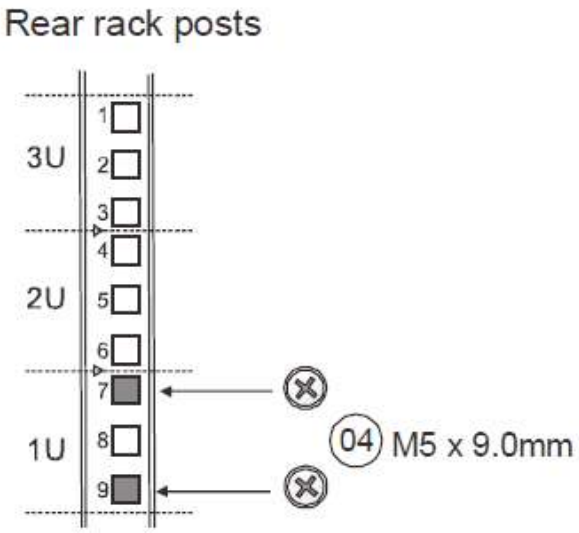

Install the fixed rack ear mount to the rear posts and secure them using truss head screws (4).

© 2022 StoneFly, Inc. | All Rights Reserved.

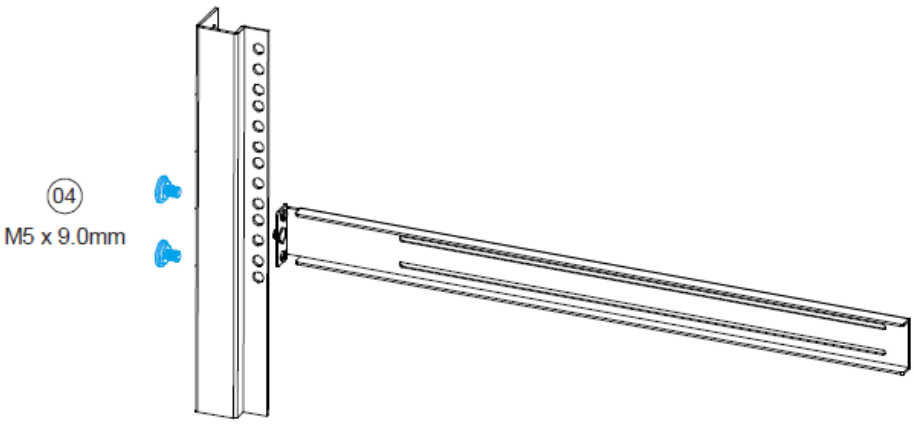

With the assistance of another person holding the enclosure at the installation height, the other person can place four M5 x 25mm (6) at the front of the enclosure and eight #6-32 screws (3), four on each side, to secure the enclosure into the rack.

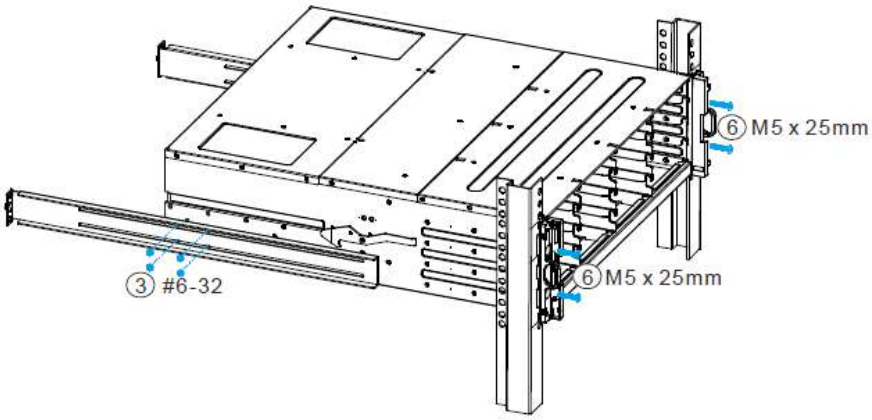

Front rack post

© 2022 StoneFly, Inc. | All Rights Reserved.

Slide Rail Kit

The following table shows all accessories that came with the slide rail kit.

Kit Contents

Item	Description	Quantity
01	Mounting bracket assembly, left-side	1
02	Mounting bracket assembly, right-side	1
03	Inner glides	2
04	Flathead screws #6-32 L4	6
05	Truss head screws M5 x9.0mm	8
06	M5 cage nuts	4
07	M5 x 25mm	4
08	M6 x 25mm	4
09	#10-32 x 25.4mm	4

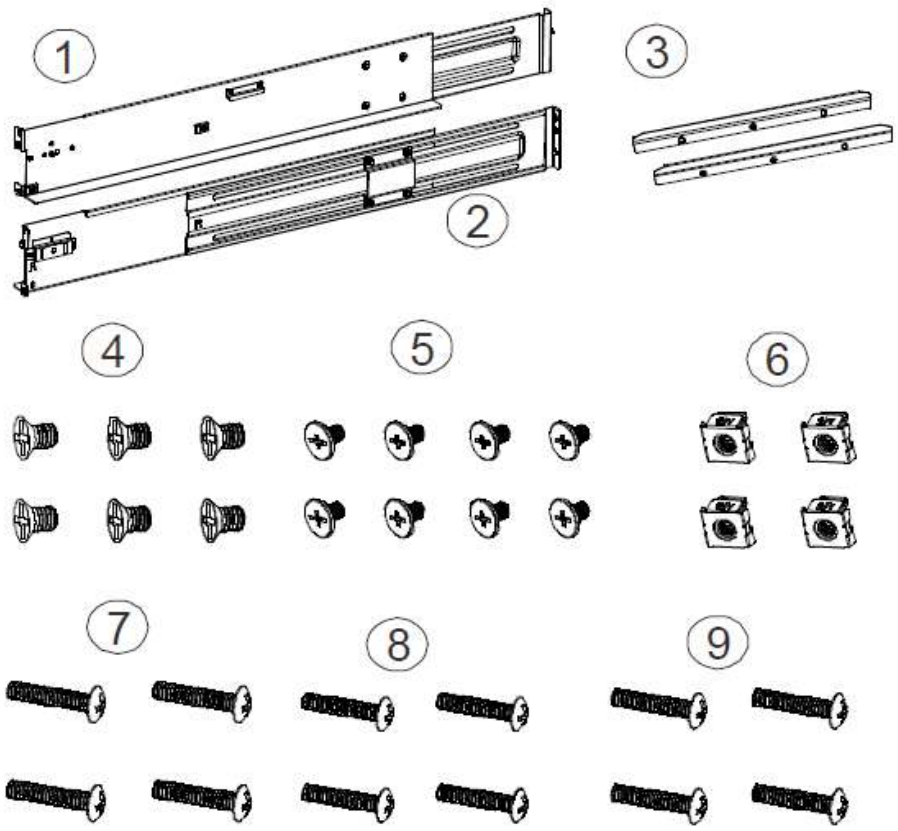

© 2022 StoneFly, Inc. | All Rights Reserved.

The installation begins with determining the installation position (front and rear rack positions) and M5 cage nut (5) insertion location.

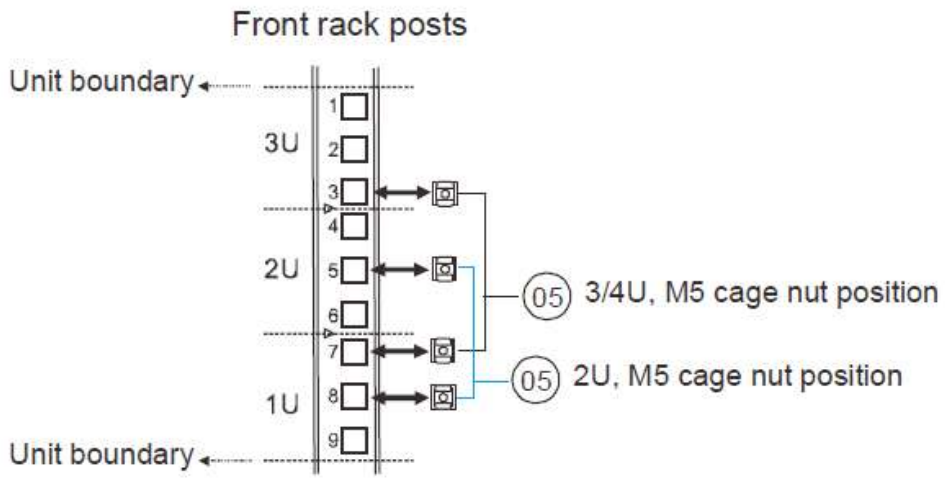

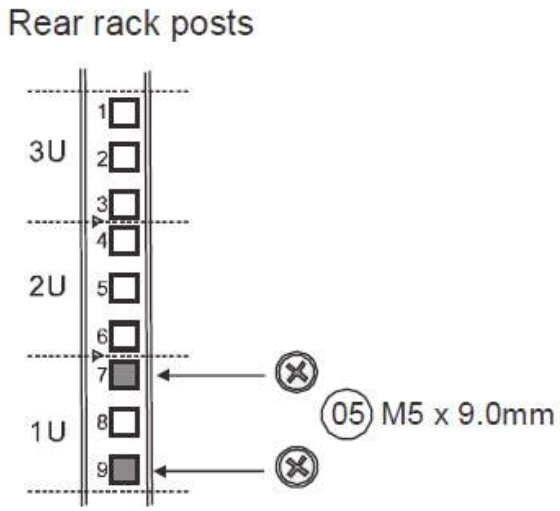

© 2022 StoneFly, Inc. | All Rights Reserved.

Adjust the length by loosening the four screws on the slide rail. Secure the slide rails to front and rear posts using truss head screws. Tighten the four screws on the slide to fix the length.

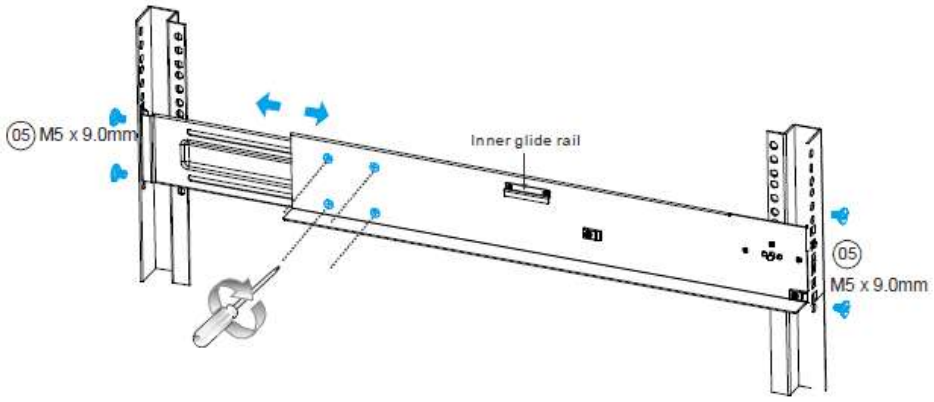

Attach the inner glides to BOTH sides of the enclosure using flathead screws #6-32 (8).

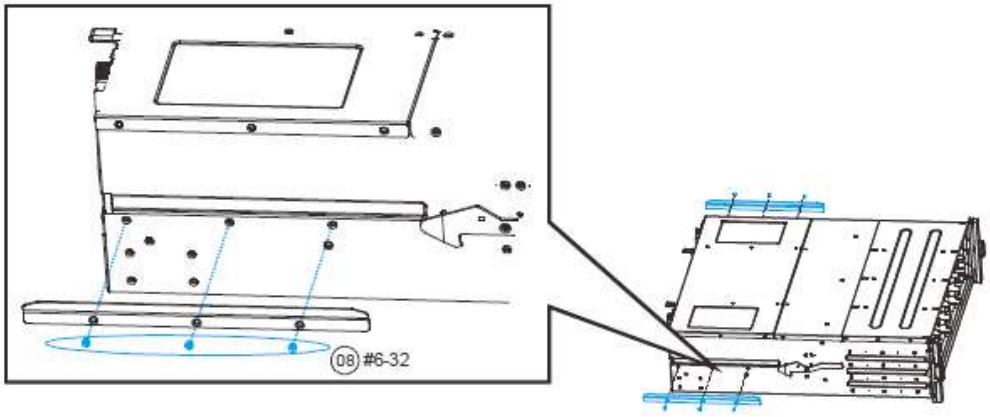

With the assistance of another person, lift and insert the enclosure onto the slide rail. Make sure the inner glides on both sides of the enclosure meets the inner glide rail. Secure the enclosure with M5 or M6 screws from the front.

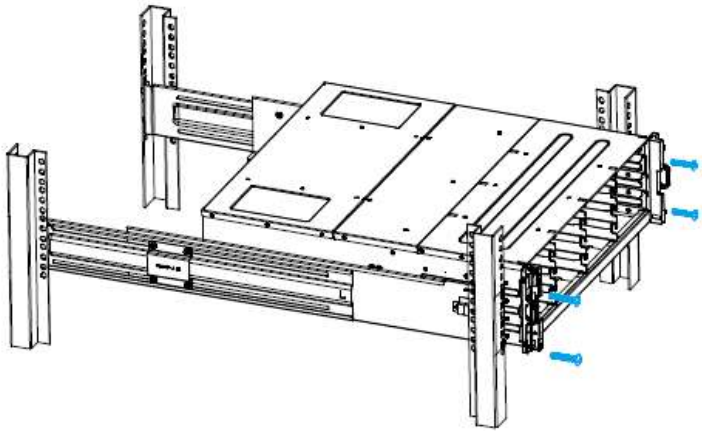

© 2022 StoneFly, Inc. | All Rights Reserved.

2.2 Safety Reminders

If you must relocate the enclosure after installation

- Cease all input / output transactions, shut down the system, disconnect all the cables (please refer to the User Manual for details).
- Empty all drive bays (hard drives + hard drive trays) and transport them separately in safe packaging.
- Modules came installed within the enclosure need not be removed.
- Follow the instructions provided in the StoneFly Getting Started Guide.

When the system is in operation

Module and drive bays must not be empty! They must have a dummy cover / plate in place to stabilized internal airflow!
Should a module fail, leave it in its place until you have the replacement item on-hand to take its place.
Allow at least 18~20cm of clearance space at the rear of the enclosure for ventilation.
Avoid touching the PCB and gold-finger connections.

© 2022 StoneFly, Inc. | All Rights Reserved.

Chapter-3: Cabling Connections & Power Up

3.1 Cabling the Equipment

The following description shows the steps for two Storage Concentrators, and one HA RAID Storage Expansion Array. Please make sure that you've securely mounted the appliances in the rack/cabinet before beginning the cabling. It's also important to note that the power is connected AFTER all of the data/network connections have been made.

Spanning Tree Protocol (STP) must be disabled on your network switch when using bonded data ports on the StoneFly USO-HA appliance.

Note: Follow the labels for each port as marked on your appliance(s).

SAS Interconnects – Standard Configuration

Connect the two included Mini-SAS HD cables between each SC and the HA RAID Storage Expansion Array, as shown below:

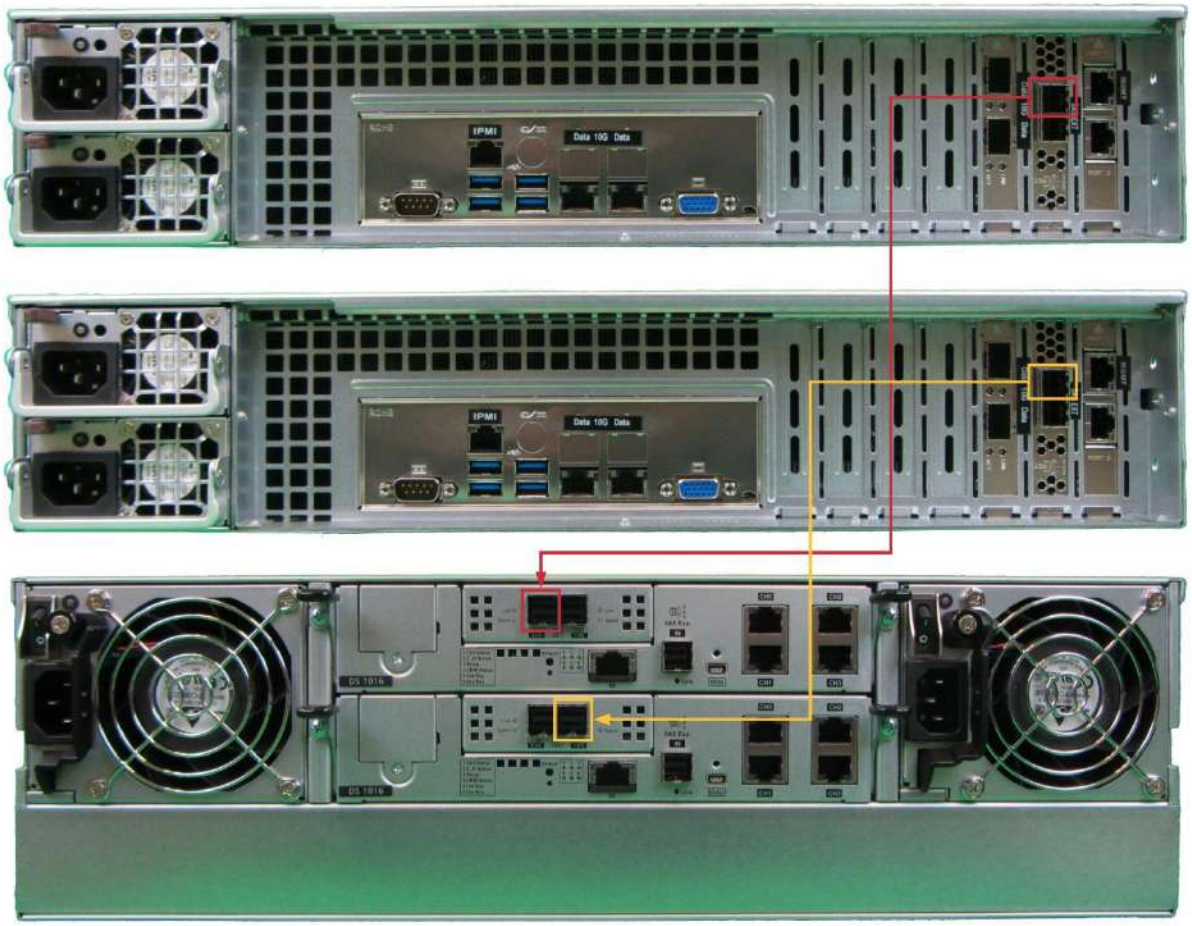

© 2022 StoneFly, Inc. | All Rights Reserved.

SAS Interconnects - Multipath Connections (Optional Upgrade)

If you have purchased the optional StoneFly Multipathing Kit, then you will be able to connect each SC to both RAID controllers on the HA RAID Storage Expansion Array.

The four Mini-SAS HD cables will be connected between each SC and the HA RAID Storage Expansion Array, as shown below (optional multipathing configuration):

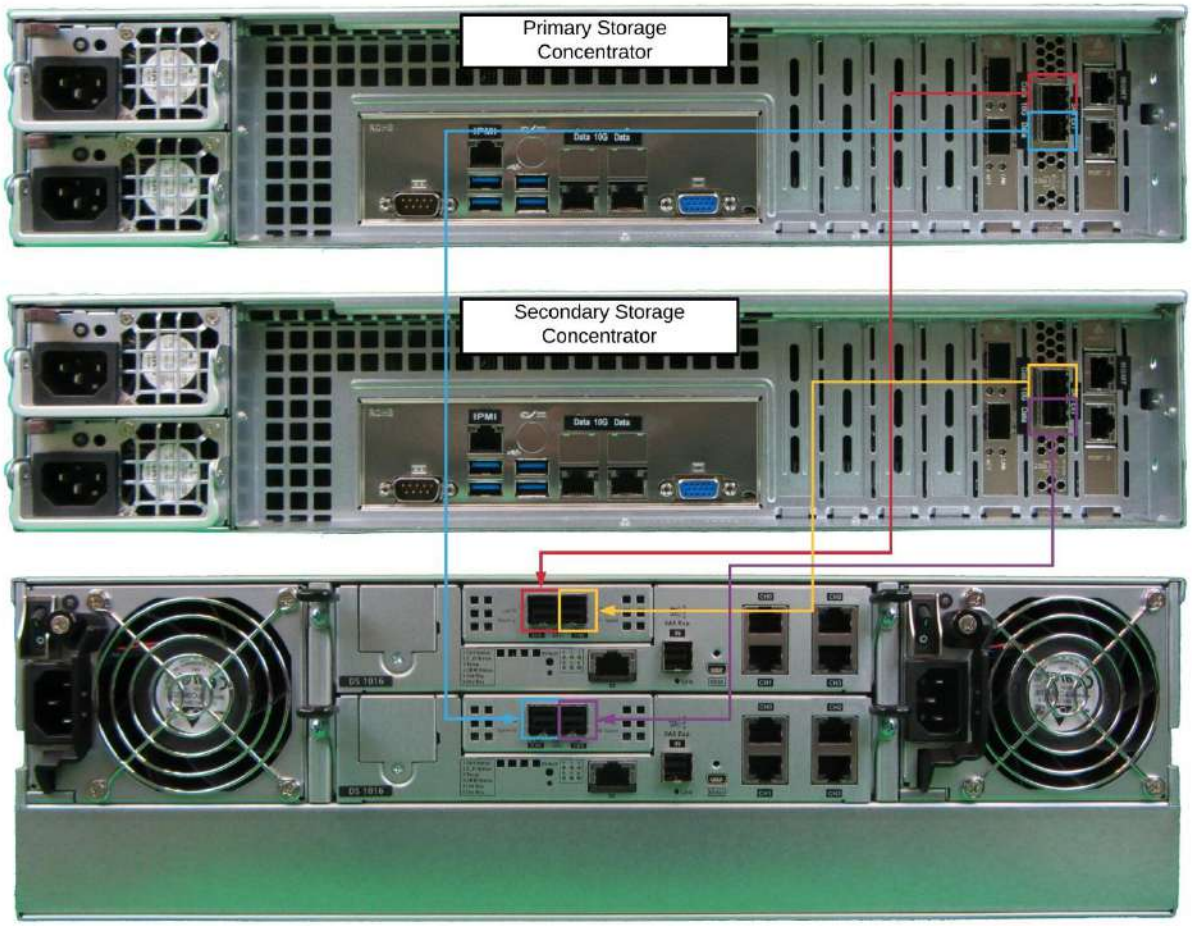

© 2022 StoneFly, Inc. | All Rights Reserved.

SAS Interconnects - JBOD

In order to connect a JBOD array, use the included Mini-SAS HD cables and connect them between the HA RAID Storage Expansion Array and JBOD array, as shown below.

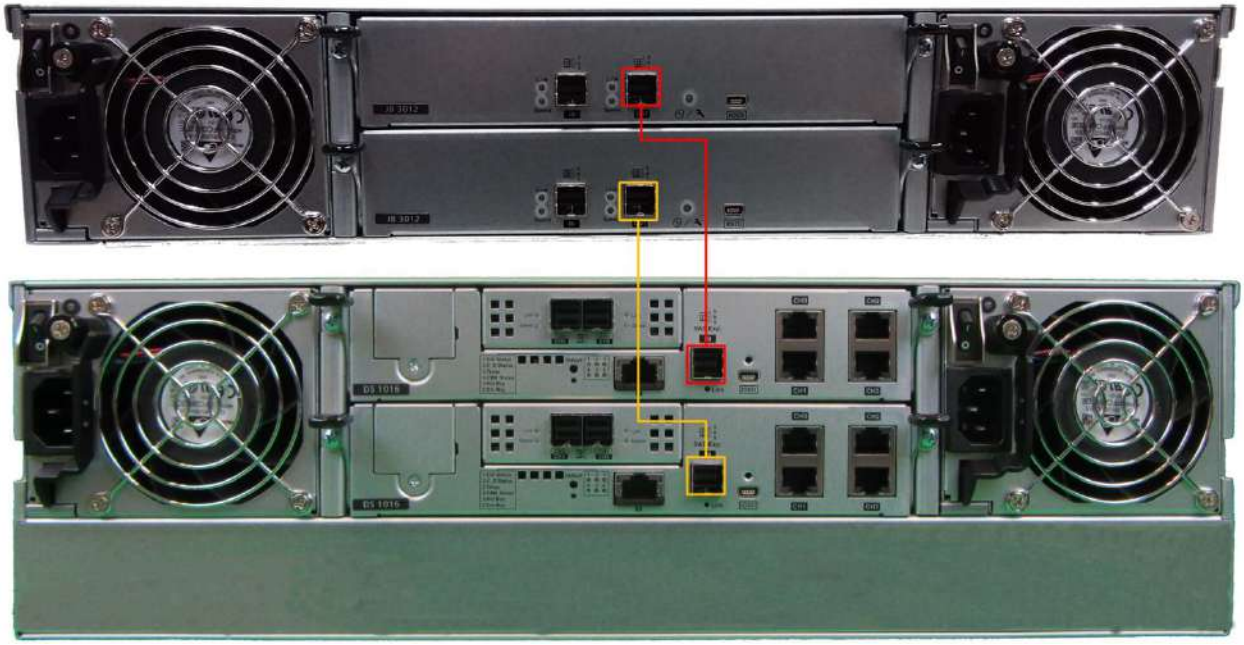

© 2022 StoneFly, Inc. | All Rights Reserved.

Network Connections

Connect SFP+ cables to the data ports on each SC, and Ethernet cables to each of the Management ports (MGMT) on all three units as shown below. For best practices, split the connections between at least two switches for each type of port.

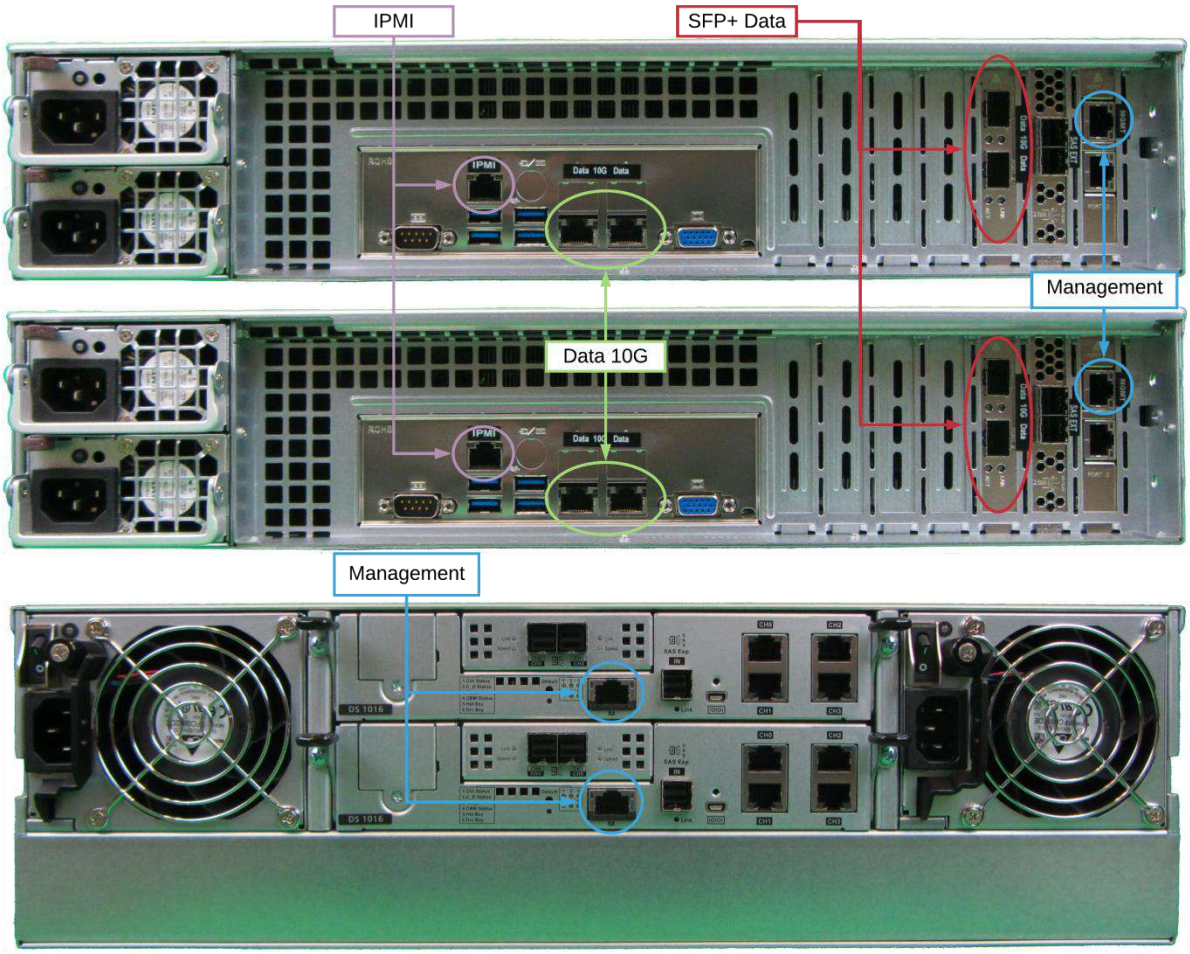

© 2022 StoneFly, Inc. | All Rights Reserved.

Power Connections

Note: Make sure to make all the connections for both SCs as described above before connecting the power cords to the system.

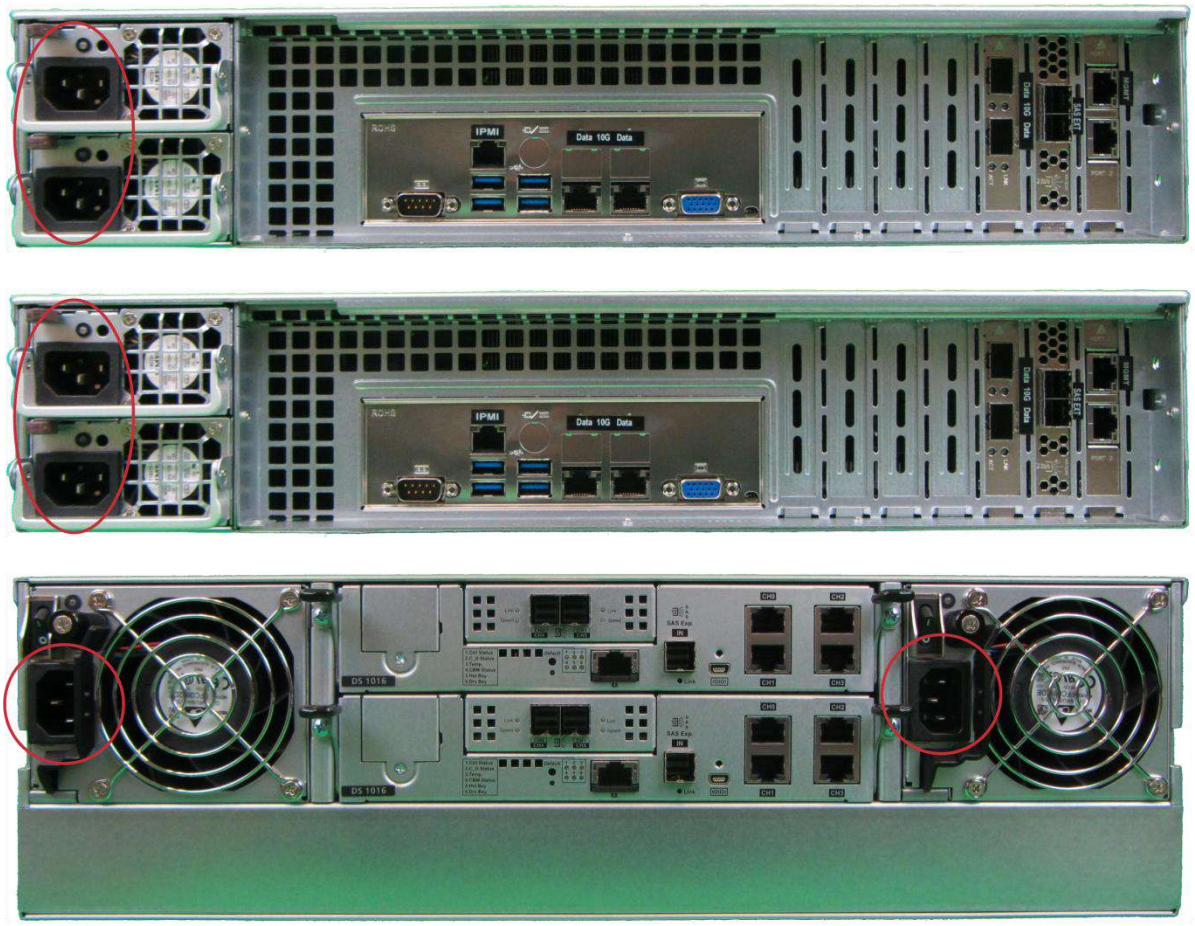

Once you've made all the connections and made sure that there are no loose cords, power on the HA RAID Storage Expansion Array and JBOD array first then power on the storage concentrators.

© 2022 StoneFly, Inc. | All Rights Reserved.

3.1.1 Powering On Procedure

Be sure to adhere to the following instructions when turning on the USO-HA system:

1. Verify that all the power and SAS cables are properly connected.
2. Power on JBOD(s) if any.
3. Wait for the drives to finish initialization – this may take 10 to 20 minutes depending on the number of drives.
4. Power on the USO-HA appliance.

© 2022 StoneFly, Inc. | All Rights Reserved.

3.1.2 Powering Down the USO-HA Appliance

If the appliance needs to be powered down, refer to the steps below in order to properly shutdown the appliance. Note that prior to shutting down your appliance; make sure that all the current tasks are finished.

Login to the SCVM on the Primary Storage Concentrator.

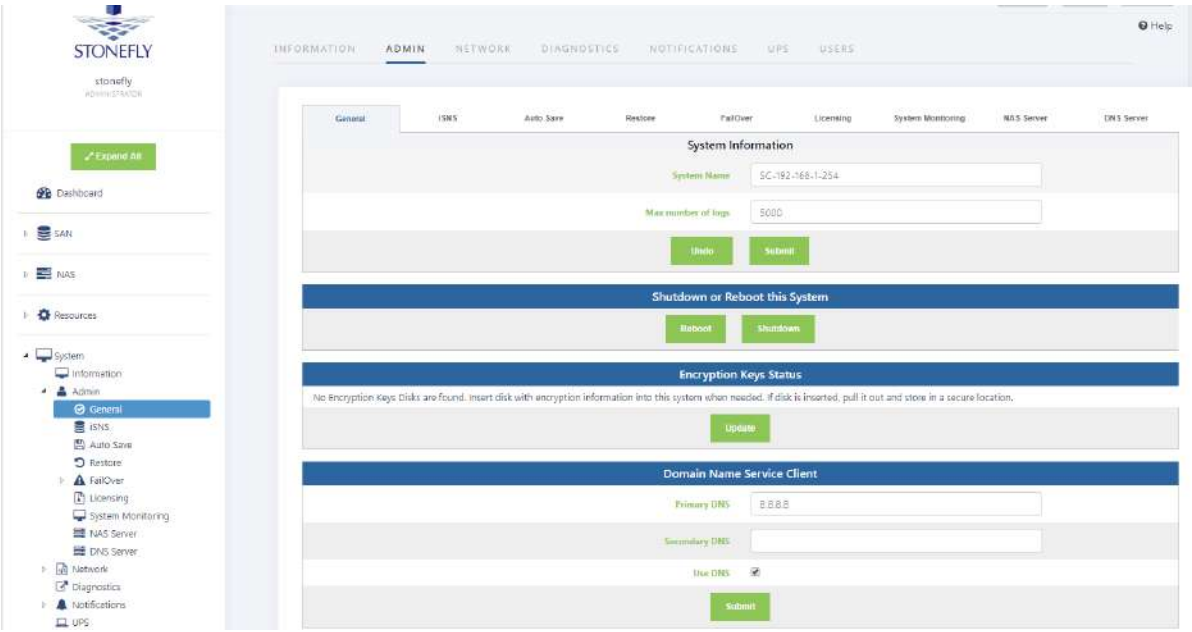

Navigate to **Admin** > **General**.

Click Shutdown.

Perform the same steps for the secondary storage concentrator.

Afterwards, shutdown both the HA RAID Storage Expansion Array and JBOD array following the procedure below.

To shut down the systems, access the HA RAID Storage Expansion array web GUI.

Once logged in, navigate to **SANWatch Home** > **Top menu bar** > **System** then select Shutdown Device from the dropdown menu.

© 2022 StoneFly, Inc. | All Rights Reserved.

When selected a list of devices should appear. Select the device you wish to shut down and click OK.

Once done, you can switch off the power and unplug your appliance (if necessary).

© 2022 StoneFly, Inc. | All Rights Reserved.

Chapter-4: Software Configuration

4.1 HA RAID Storage Expansion Array IP Address Configuration

You can configure the IP address for the HA RAID Storage Expansion Array via either the Serial port or Ethernet port on the rear of the unit.

Serial port: A Y-cable is provided in the package. (NOTE: null modem may be required if you are using a third-party cable).

The serial port's defaults are:

Baud Rate	38400
Data Bit	8
Parity	None
Stop Bit	1
Flow Control	Hardware

For TCP/IP connection and firewall configuration with a management station running the storage array's web interface, please refer to storage array web interface online help or User's Manual. If your network environment is not running DHCP server protocols, a default IP address of <10.10.1.1> can be used to access the unit for the first time.

Use the Ethernet management port for management purposes only, i.e., storage array web interface or telnet console. This Ethernet management port is not used for I/O transactions.

Management network ports are boxed in red, serial ports are boxed in blue. This is an example controller, controllers do vary from configuration to configuration.

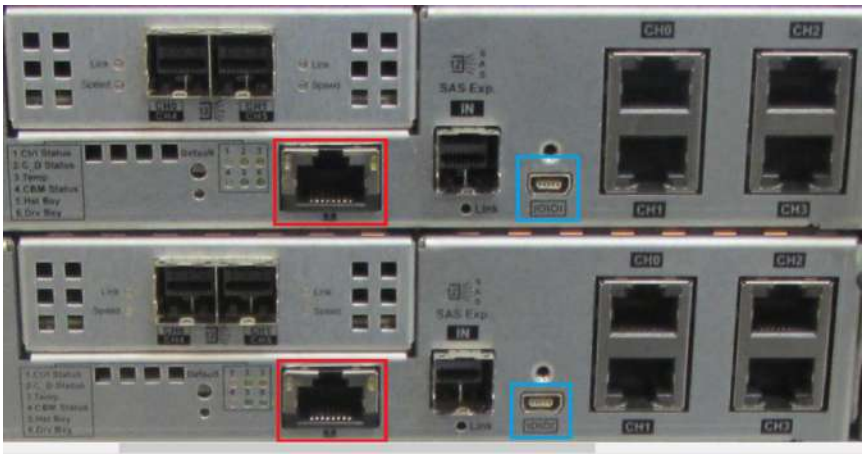

4.1.1 Serial port setup

When setting up via the serial port, enter the settings as shown below:

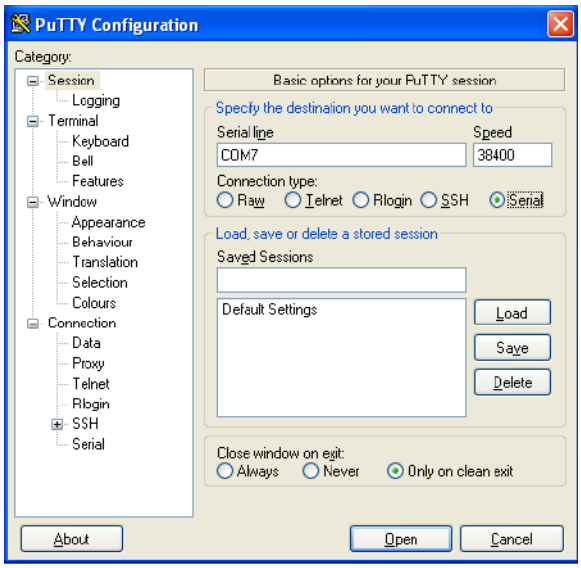

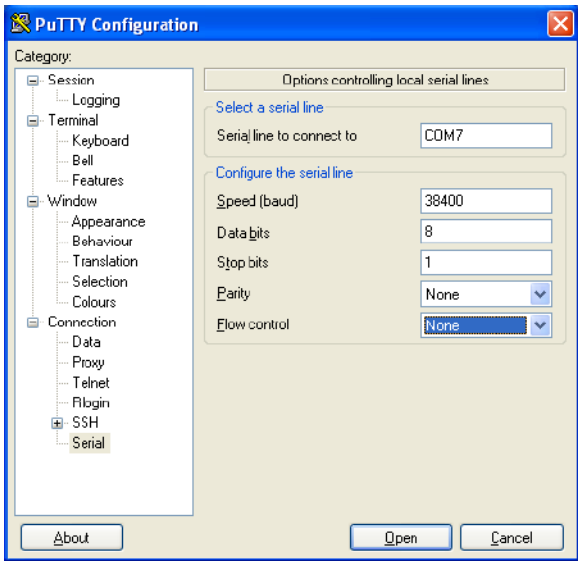

© 2022 StoneFly, Inc. | All Rights Reserved.

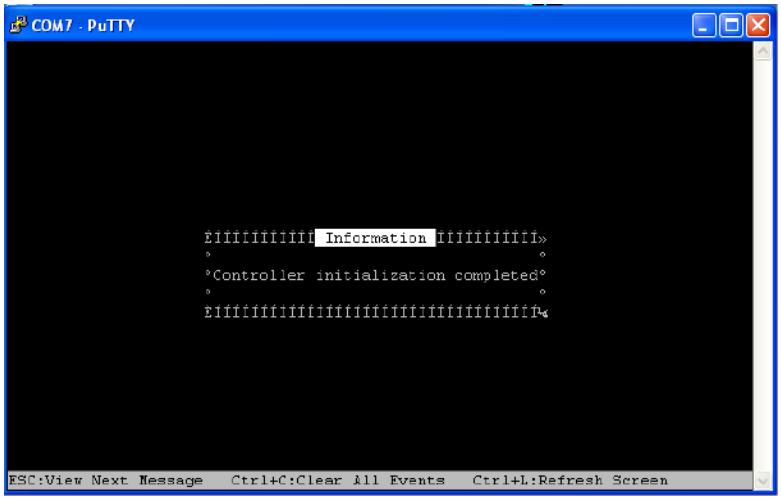

Hit **ESC** to view next screen.

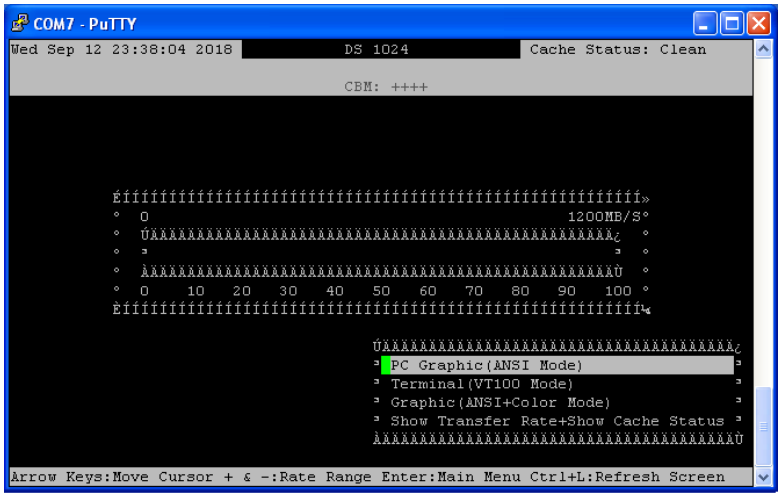

Select **PC Graphic (ANSI Mode)** then hit enter.

© 2022 StoneFly, Inc. | All Rights Reserved.

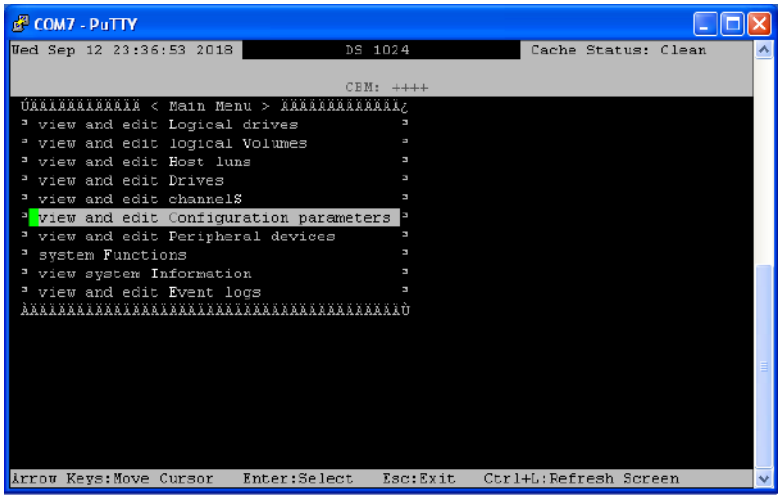

Select **view and edit Configuration parameters** then hit enter.

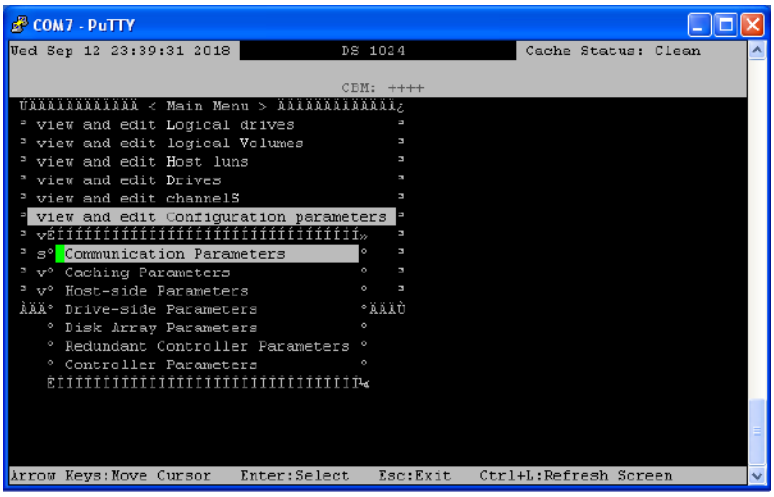

Select **Communication Parameters** and hit enter.

© 2022 StoneFly, Inc. | All Rights Reserved.

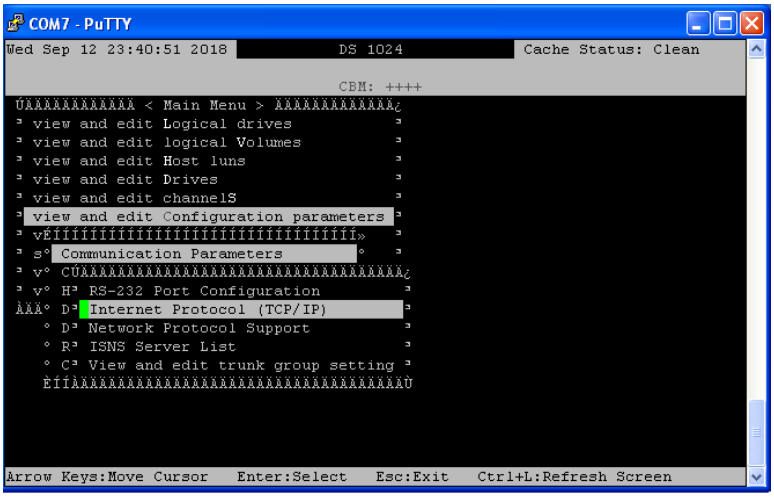

Select **Internet Protocol (TCP/IP)** and hit enter.

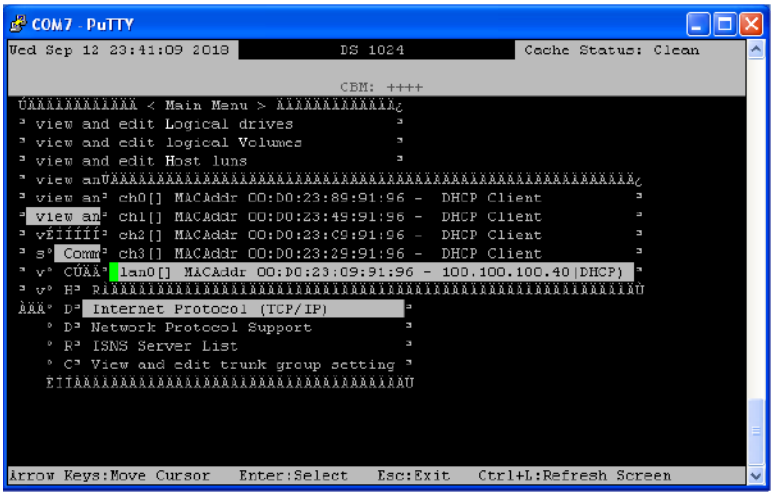

Select **lan0** and hit enter, then select **static** and enter the IP address as needed.

© 2022 StoneFly, Inc. | All Rights Reserved.

4.1.2 Web GUI IP Address setup

When setting up via the Ethernet port/web GUI, follow the instructions as shown below:

The default Password is blank. Just click on the **Login** button.

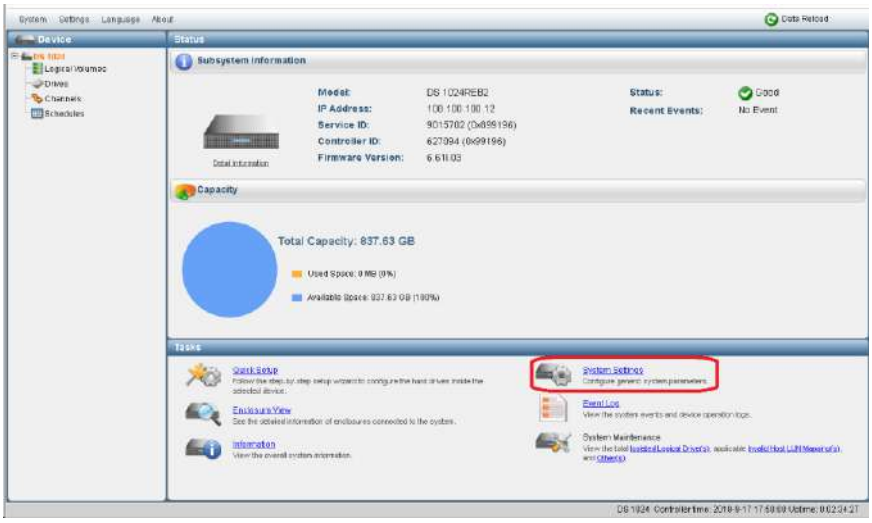

Click on **System Settings**.

© 2022 StoneFly, Inc. | All Rights Reserved.

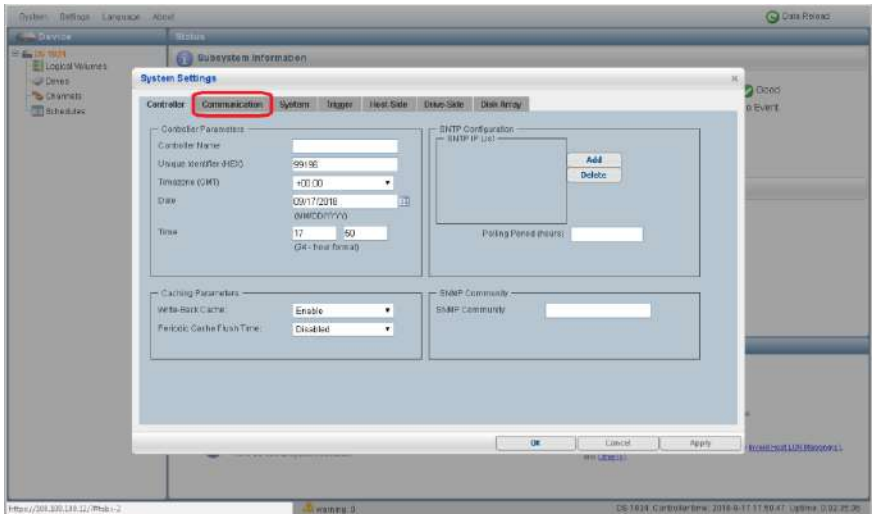

Select **Communication**.

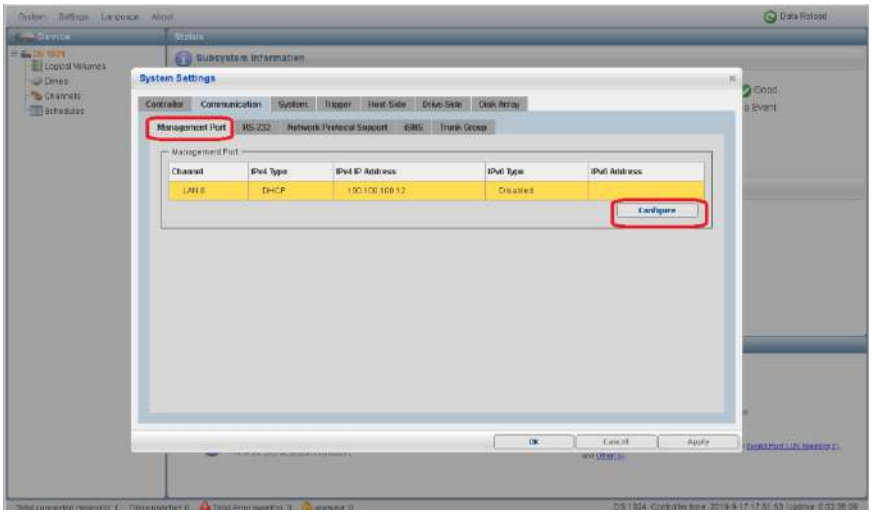

Select **Management Port** then click on the **Configure** button.

© 2022 StoneFly, Inc. | All Rights Reserved.

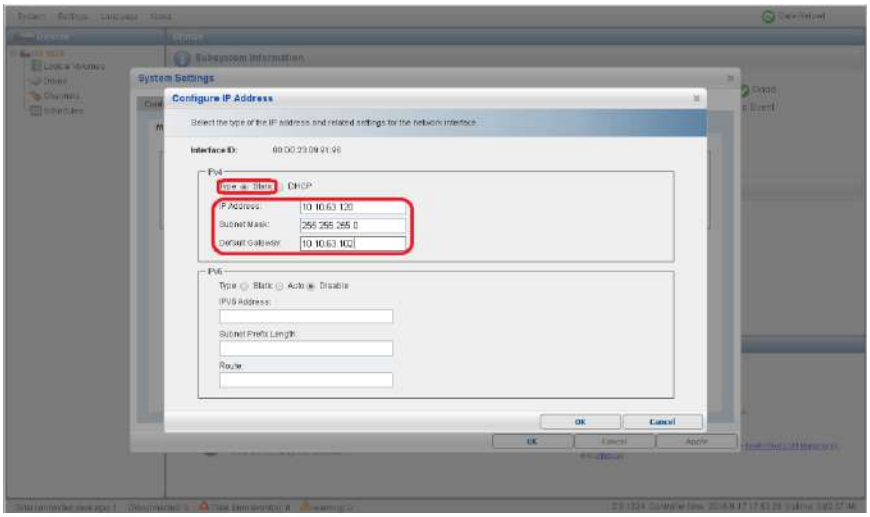

Select **Static** then enter your network information. Click **OK** when completed.

© 2022 StoneFly, Inc. | All Rights Reserved.

4.2 Configuring IPMI KVM

The Intelligent Platform Management Interface (IPMI) KVM configuration allows for **Remote Management** and **Power Control** of the StoneFly USO-HA system. This configuration is optional to perform, but recommended.

To configure the IPMI module, connect a keyboard and monitor to the system. Power on the system and press the **Del** key to enter the BIOS setup.

Navigate to **IPMI** tab and go to **BMC Network Configurations**:

© 2022 StoneFly, Inc. | All Rights Reserved.

In the **BMC Network Configuration** tab, select **Update IPMI LAN Configuration** and press **Enter**:

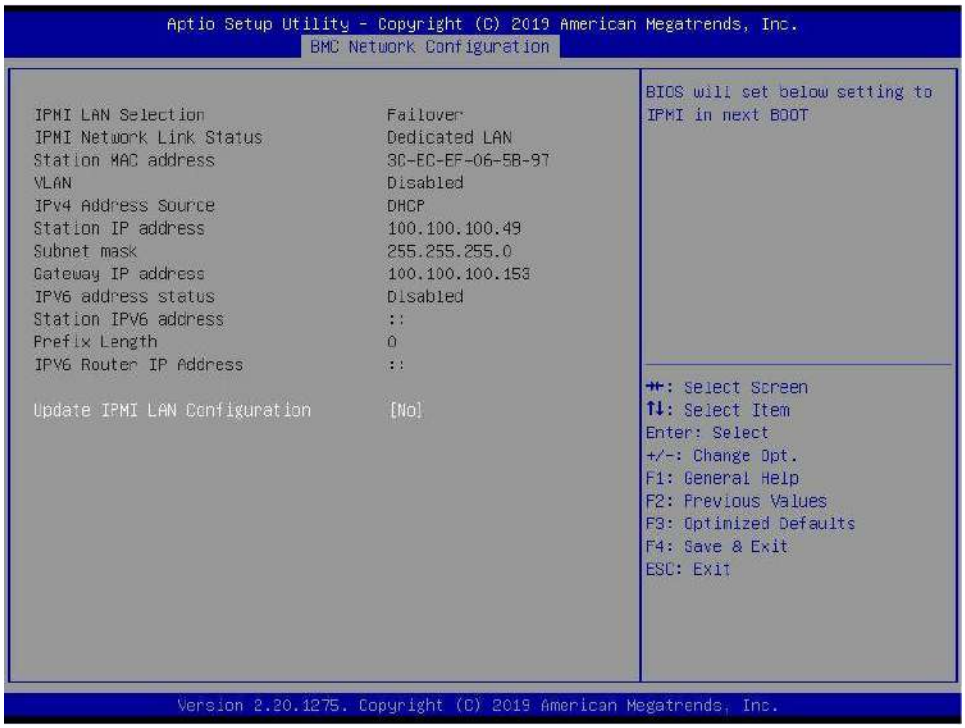

When prompted, select **Yes** and press **Enter**.

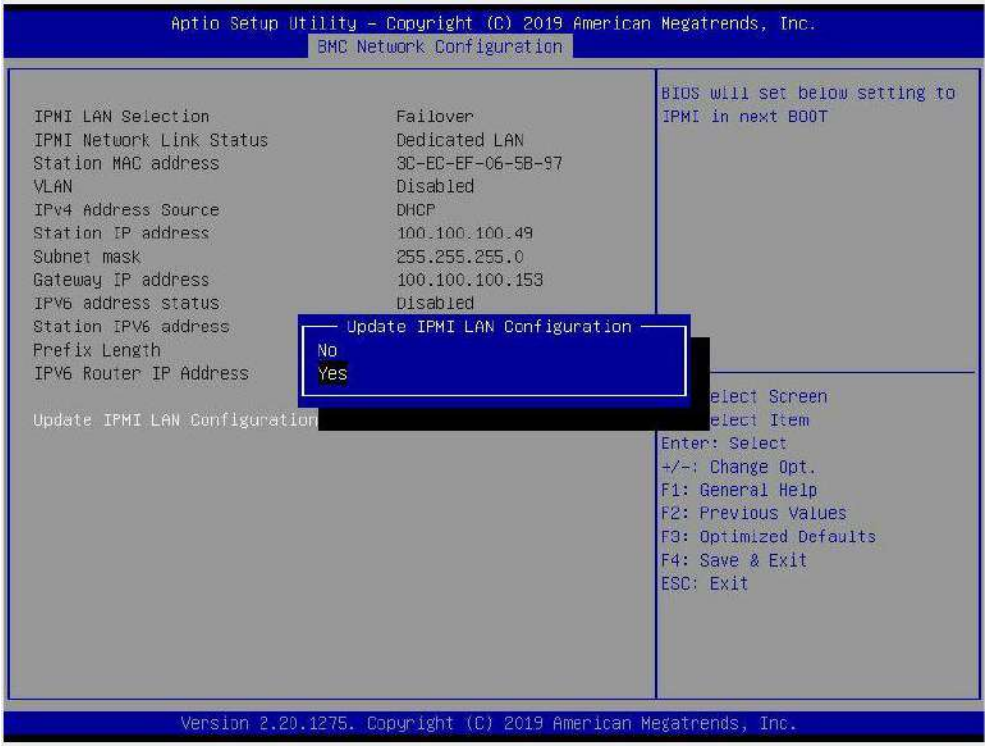

From the additional list of options, select **Configuration Address Source** and press **Enter**:

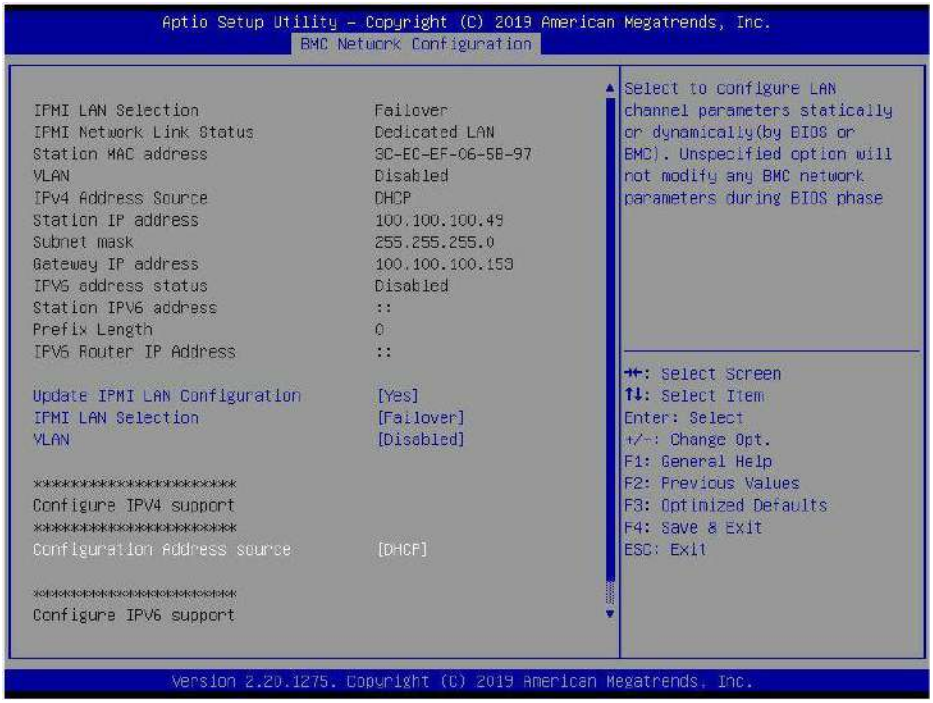

From the prompt, select **Static** and press **Enter:**

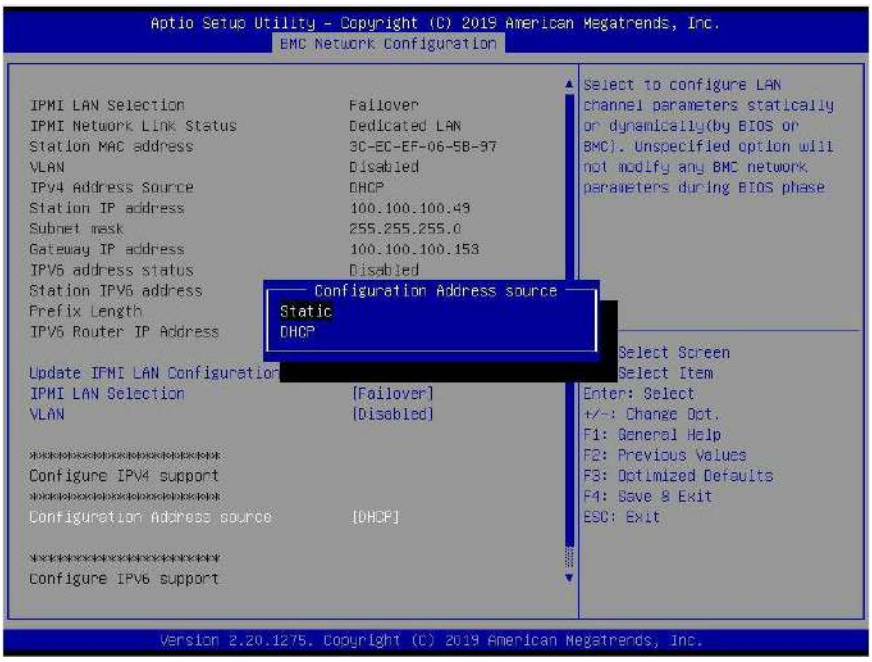

Enter the **Static IP Address, Subnet Mask** and **Gateway IP Address.**

© 2022 StoneFly, Inc. | All Rights Reserved.

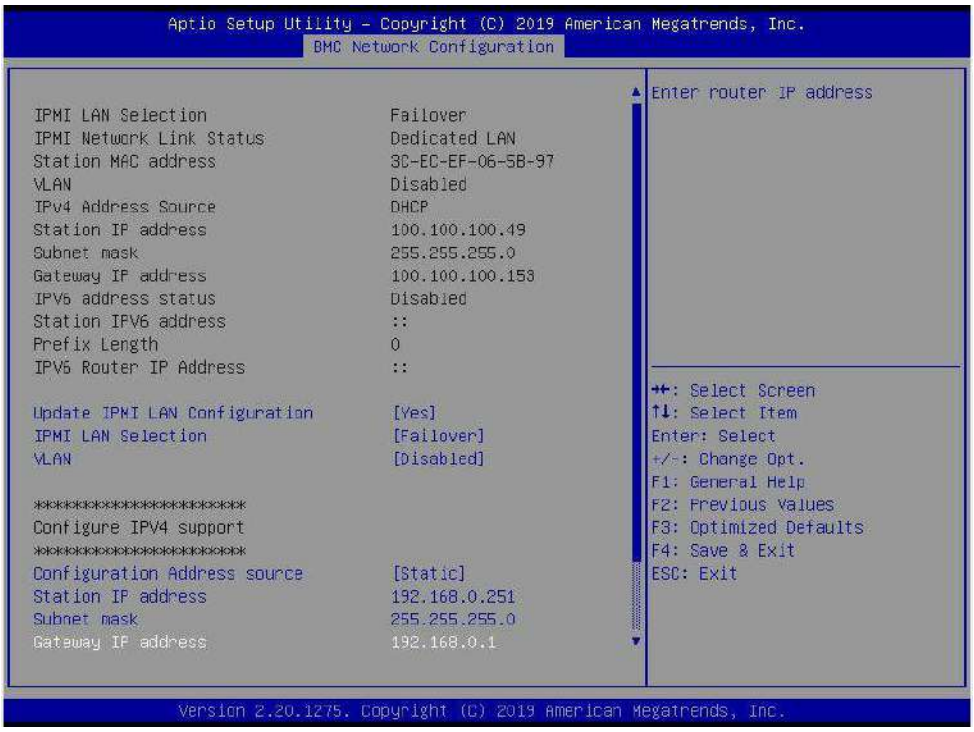

When entering addresses, please note:

1. IP Address Must be on the same subnet as USO-HA's Management port
2. IP Subnet Mask Same as USO-HA's Management port
3. Default Gateway Same as USO-HA's Management port

Press the "ESC" key to exit. Navigate to the **Exit** tab and select **Save Changes and Exit**.
Note: The system will require power to be removed before IPMI IP Address will take effect.

Accessing the IPMI Interface

Start a browser and navigate to the configured IP address.

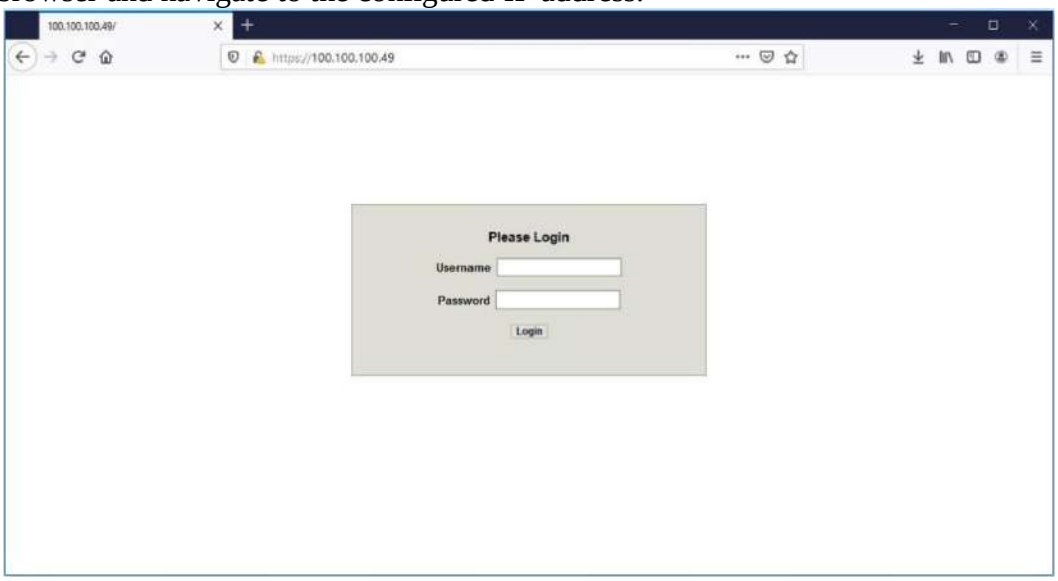

© 2022 StoneFly, Inc. | All Rights Reserved.

Enter the following information in the login screen:

- Username: stonefly
- Password: Stonefly1

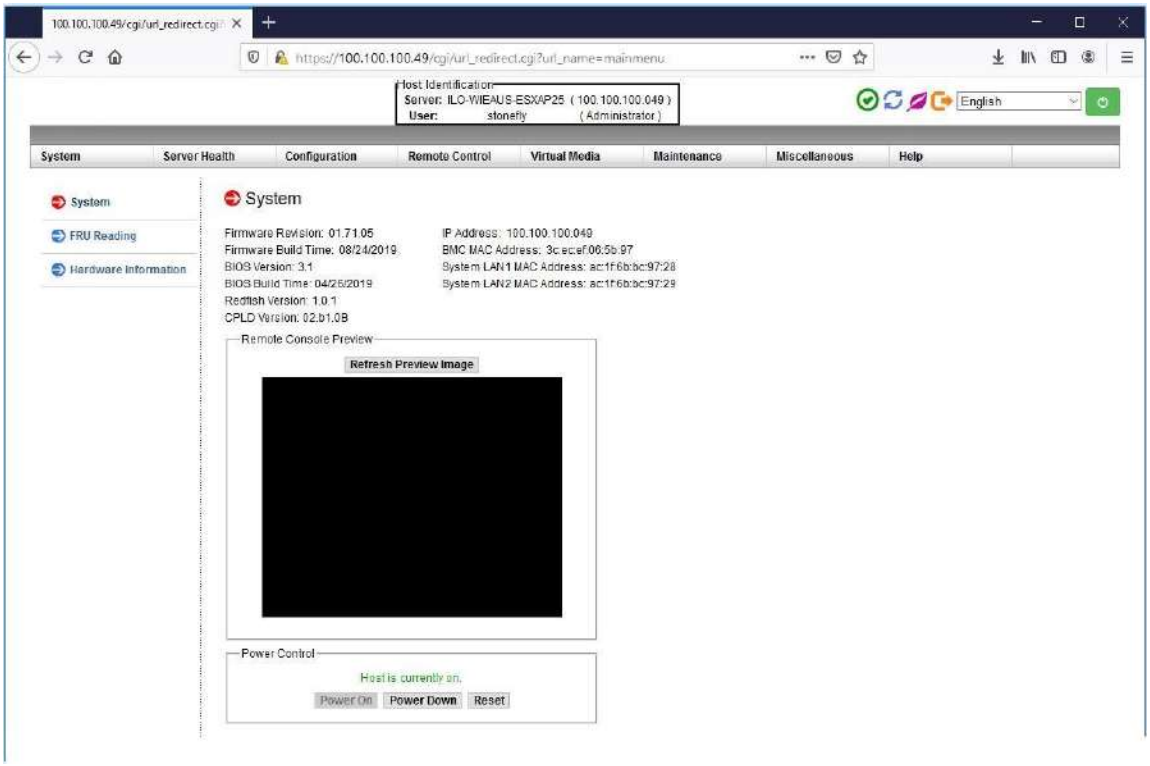

Navigate to **Remote Control** tab and select **iKVM/HTML5**:

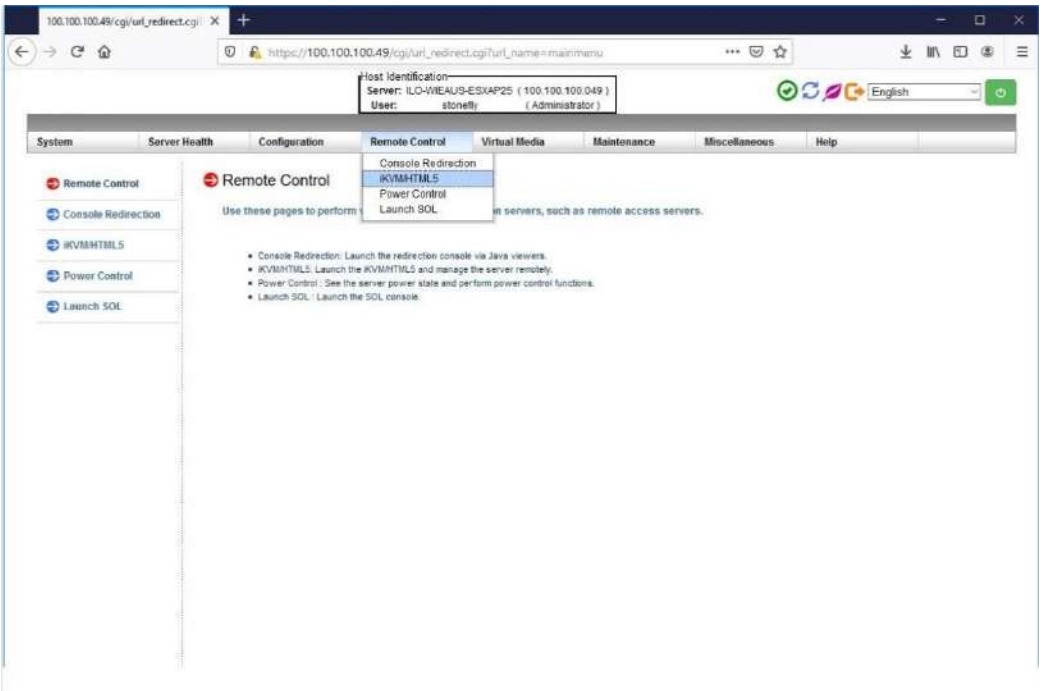

© 2022 StoneFly, Inc. | All Rights Reserved.

Click on **iKVM/HTML5** to launch remote console:

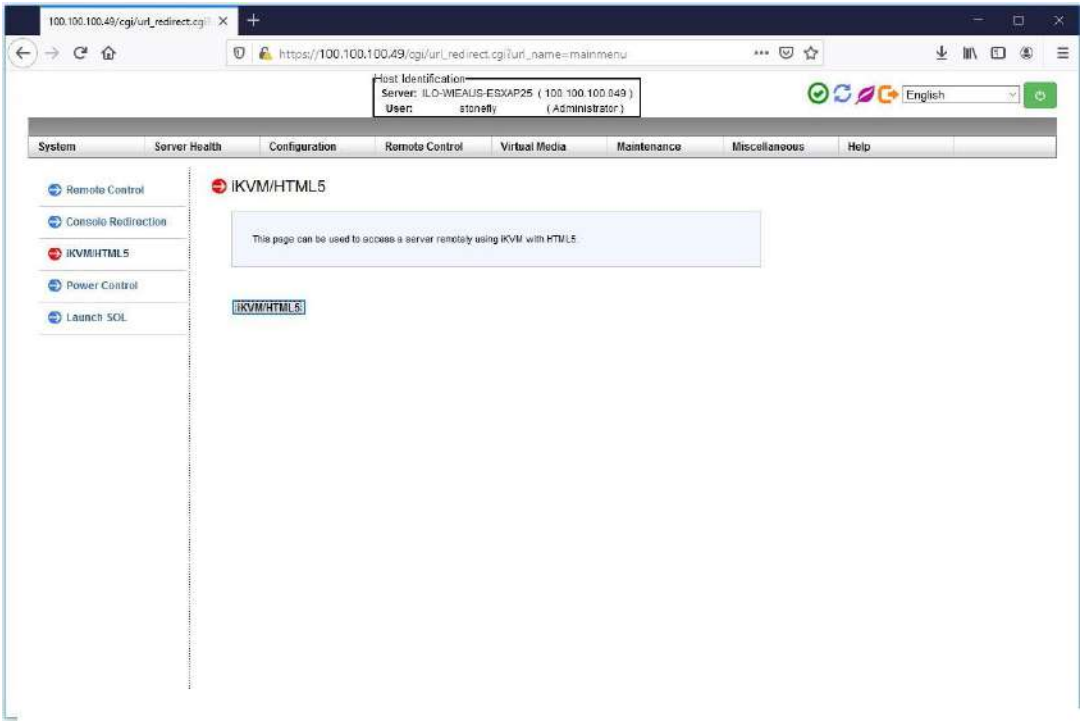

Select **Launch Console** to open the system console.

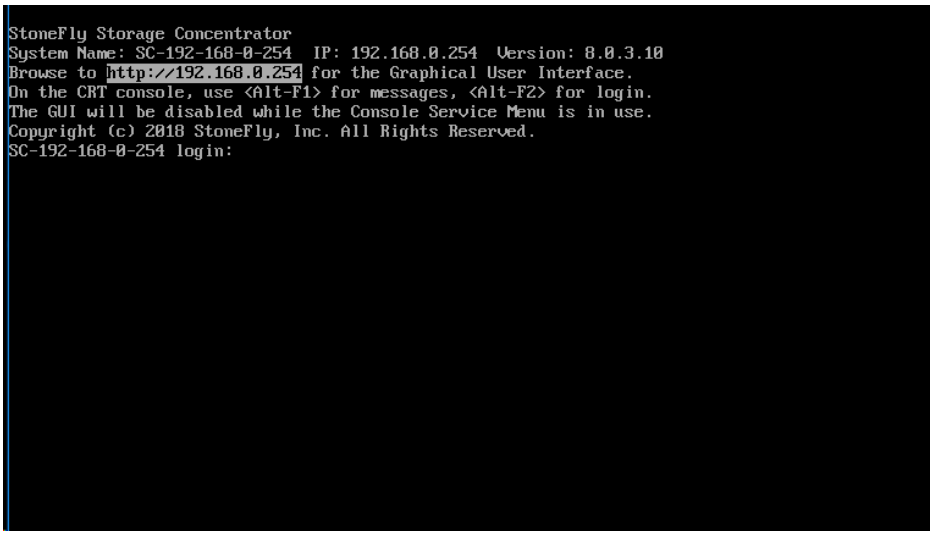

The console screen will appear as shown above.

4.3 Configuring the Network Settings for the USO's Management Port

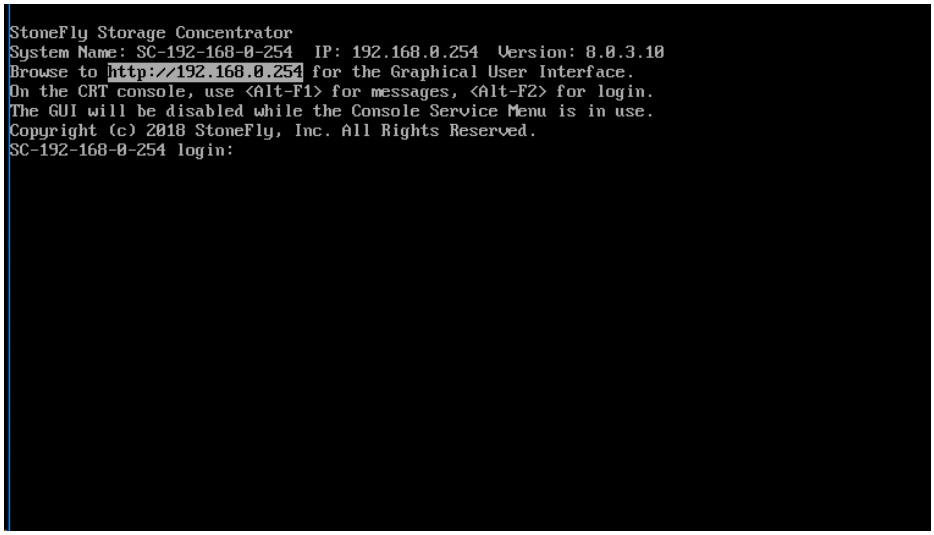

The USO's management port is preconfigured with the default IP address of 192.168.0.254. This must be changed to a valid IP address for your LAN network. Using the remote console you loaded in the previous section:

Press **Enter** to display the login prompt.

At the User ID prompt type **console** and hit **Enter**.

At the password prompt type **coni100o** and hit **Enter**. Note that the User ID and password are case sensitive.

Using the Storage Concentrator Service menu, enter **2** to select **Network**.

The current network configuration settings will appear as shown below:

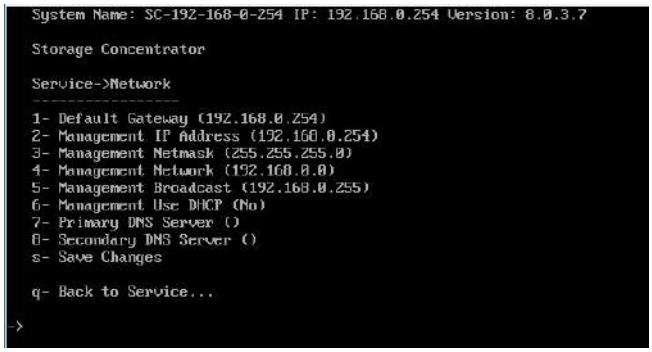

Configure all of the network settings to those appropriate for your LAN network by

selecting each of the numbered fields. When finished, enter **s** option to **Save Changes**, then completely exit the CLI using the **q** option for **Logout**. The login prompt should reappear.

Browser access to the USO's management GUI is blocked while the CLI menu is active. Also note that there can be a short delay before the web GUI becomes available once the CLI is closed.

At this point, it should be possible to login to the web GUI for the StoneFly USO appliance by browsing to the management IP address that you just configured in the last step. Once logged in, you should configure the SAN data network settings.

© 2022 StoneFly, Inc. | All Rights Reserved.

4.4 Initial Configuration of Stonefly USO Appliance

Launch a web browser, then navigate to https://<configured IP address>.

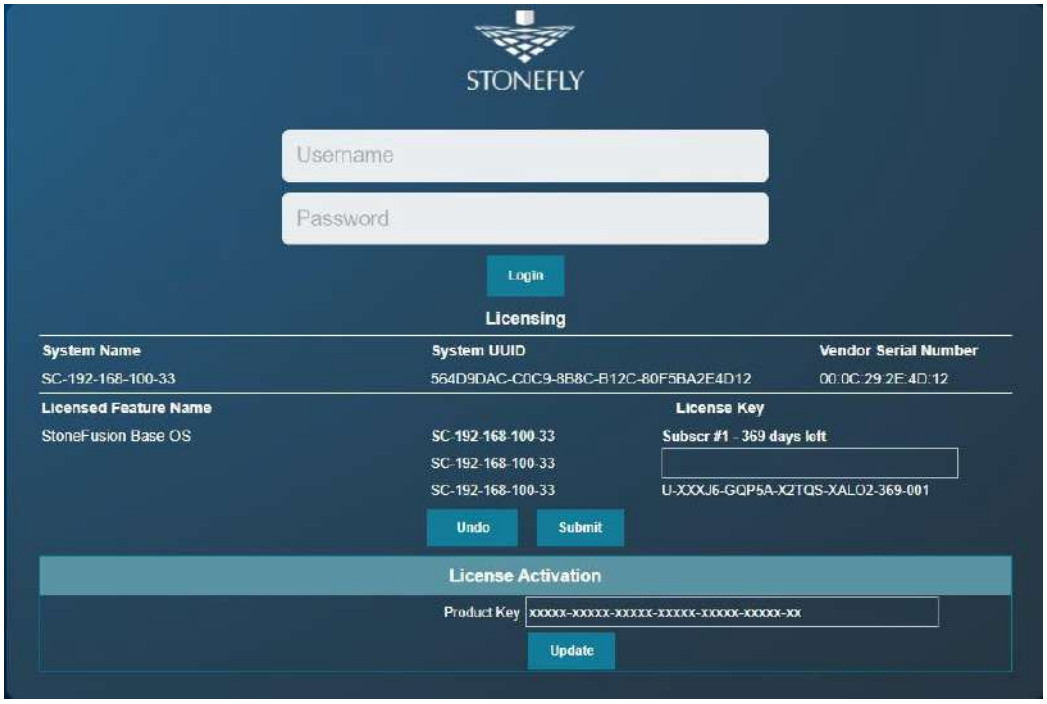

StoneFusion Login Screen

In the User ID field type: **admin**

In the Password field type: **M@n4g1ng**

Click **Submit**. The Home Page screen will appear.

Click **System.**

Click **Admin**.

© 2022 StoneFly, Inc. | All Rights Reserved.

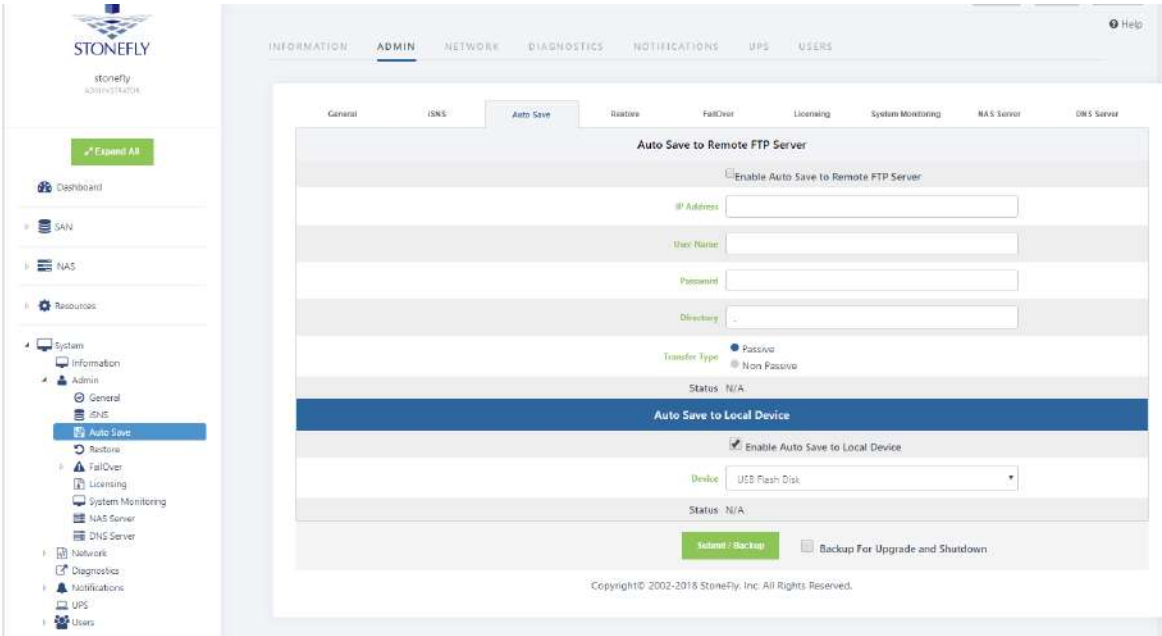

StoneFusion Auto Save Screen

Click **Auto Save**. The Auto Save screen will appear.

Select the method(s) of saving the database. A USB Flash drive must be inserted into the USB port prior to Enabling. Checkmark **Enable Auto Save to Local Device** and select **USB Flash Disk** from the dropdown menu. Click **Submit**. For **Auto Save to Remote FTP Server** create a directory for each Storage Concentrator. Fill in the IP Address, User Name, Password and directory. Select **Passive** or **Non Passive** and click **Submit**. Both methods can be used, but at least one should be configured to ensure recovery if needed.

© 2022 StoneFly, Inc. | All Rights Reserved.

Navigate to **Admin > General**. The system admin screen will appear.

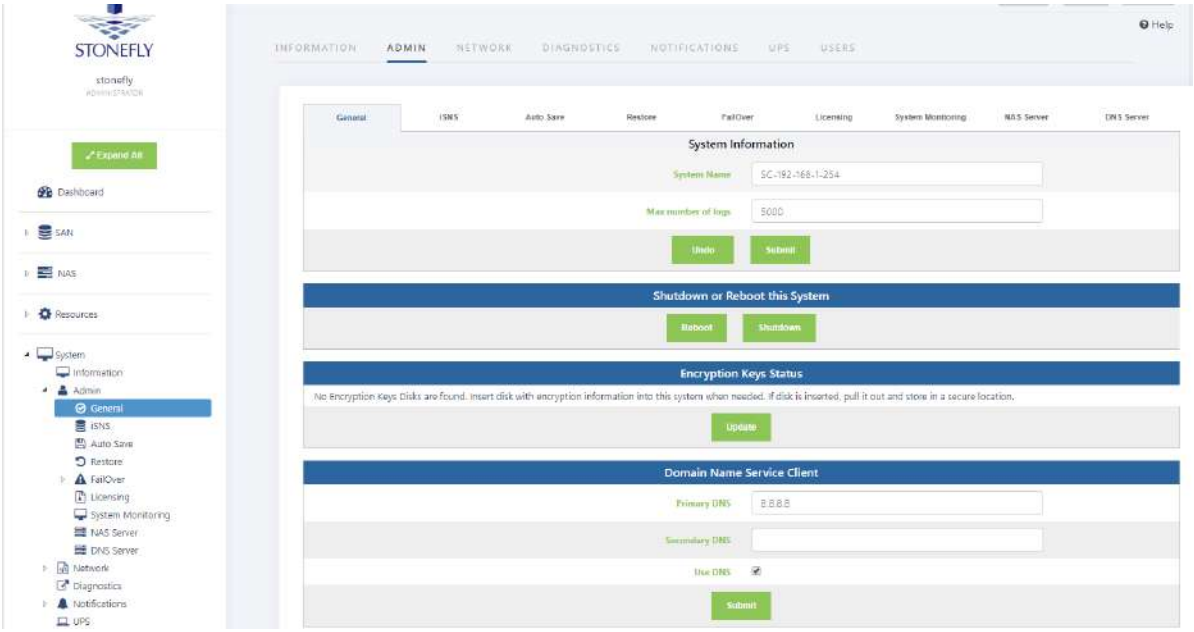

StoneFusion Admin Screen

Enter a system name for the USO appliance.

Enter the number of log records for the database in the **Max number of logs** field.

The default number of log records is 2000, which is sufficient for most installations.

Click **Submit**.

© 2022 StoneFly, Inc. | All Rights Reserved.

Navigate to **Network > Data Port**. The Local iSCSI Data Port Settings screen will appear with the current system (factory) settings. Most fields are blank.

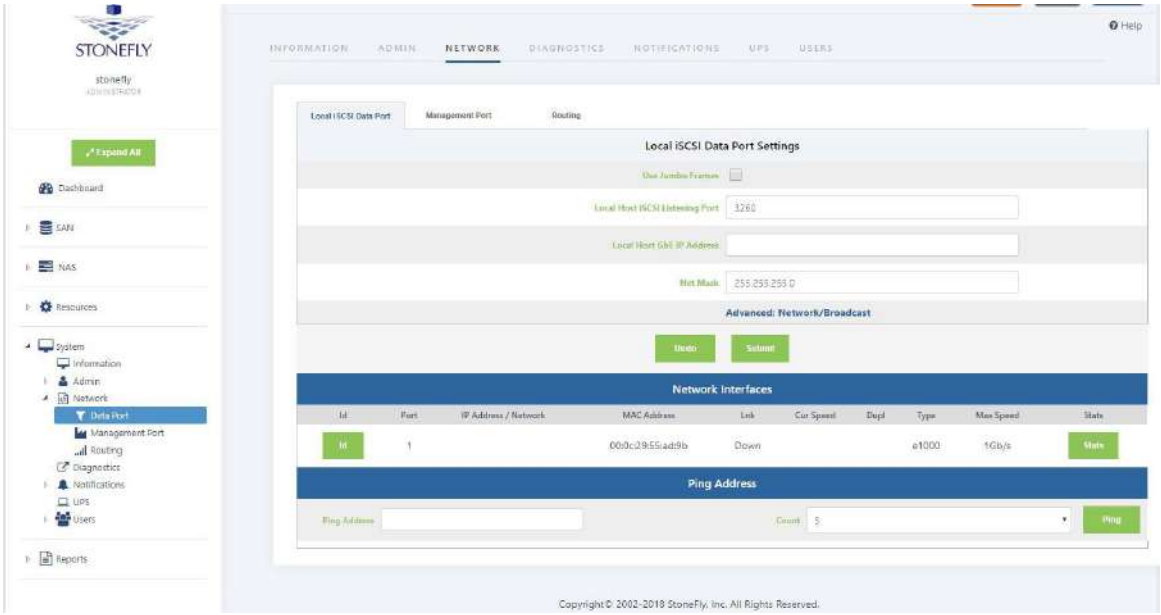

StoneFusion Local iSCSI Data Port Settings Screen

Enter the **IP Address** for the Local iSCSI Data Port. Enter the **NetMask** setting for the Local iSCSI Data Port. Click **Submit**.

Click **OK** to continue when the confirmation dialog box appears. The USO automatically configures the Network and Broadcast settings based on the IP address and Netmask settings.

Click on the **Advanced: Network/Broadcast** link to view or modify the Network and Broadcast settings. For more information, see "Chapter 2: Administrative Interface" in the Storage Concenter User's Guide.

Review the status of all SAN Network Interfaces to select which ports will be used. It is not necessary to select all available ports. All ports selected must have cables attached to them to maintain the proper cluster configuration and operation. The **Id** button is used to flash the link light on a specific port. Select a port by clicking on the box in the **Bond** column.
Changes are not enforced until the next reboot.

At the first power up, a default configuration is presented. Changing the default settings requires a reboot of the USO appliance. Navigate to the **System > Admin > General** screen and click on **Reboot**. If no changes are desired continue to the next step to configure the Management Port.

Click on **Management Port**. The Management Port Settings screen will appear.

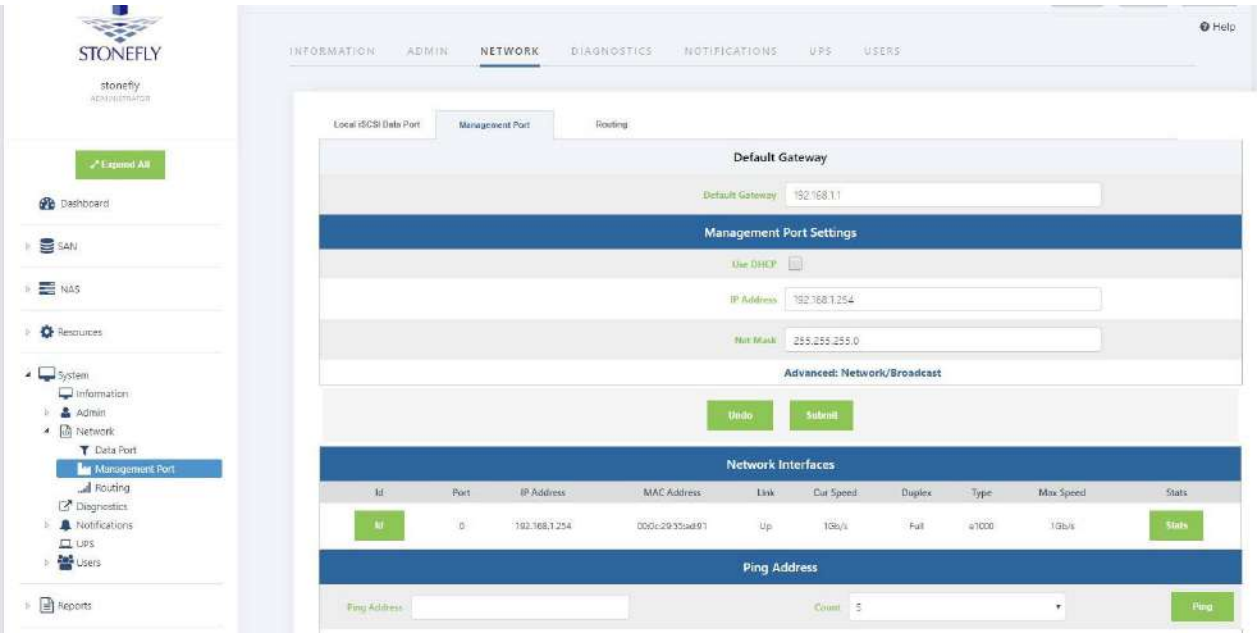

StoneFusion Management Port Settings Screen

Enter the **Default Gateway** setting.

Enter the **IP Address** for the Management port.

Enter the **NetMask** setting for the Management port. It is not necessary to select a Management Port as on the Local iSCSI Port screen. There is only one port assigned for this purpose.

The USO automatically configures the Network and Broadcast settings based on the IP address and Netmask settings. Click on the **Advanced: Network/Broadcast** link to view or modify the Network and Broadcast settings. For more information refer to "Chapter 2: Administrative Interface" in the Storage Concentrator User's Guide.

Changing the IP address of the Management port will cause your browser to lose its connection to the USO appliance. To regain access to the USO, change your browser's URL to point to the new IP address.

© 2022 StoneFly, Inc. | All Rights Reserved.

Click **Submit**. The following popups will appear.

Depending on the speed of your browser connection, you may not see this screen. Your changes will still take effect, however, you will need to manually set your browser's URL to point to the new IP address.

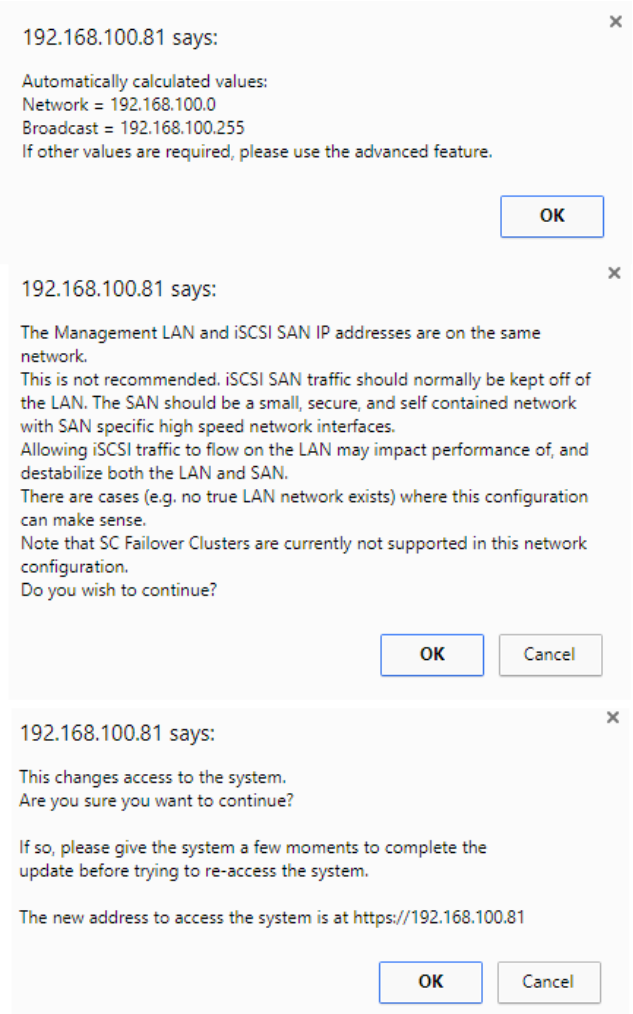

System Management Port Change Screen

1. Click on **OK** on each popup screen to continue.
2. Click on the new IP address to confirm the change to the Management Port setting.

© 2022 StoneFly, Inc. | All Rights Reserved.

Setting up Routing

To access a host on other networks, routing information to those networks must be configured in the System Management Network Routing screen. A route must be added if the host has a network setting that is different from the one listed in the iSCSI Host LAN Port Settings screen.

For example, if the *USO-HA* network setting is 26.34.128.50 and the host network setting is 106.39.212.6, a route to the host must be configured.

To configure the routing information, use the steps that follow:

1. Navigate to **System > Network > Routing**. The Routing screen will appear.

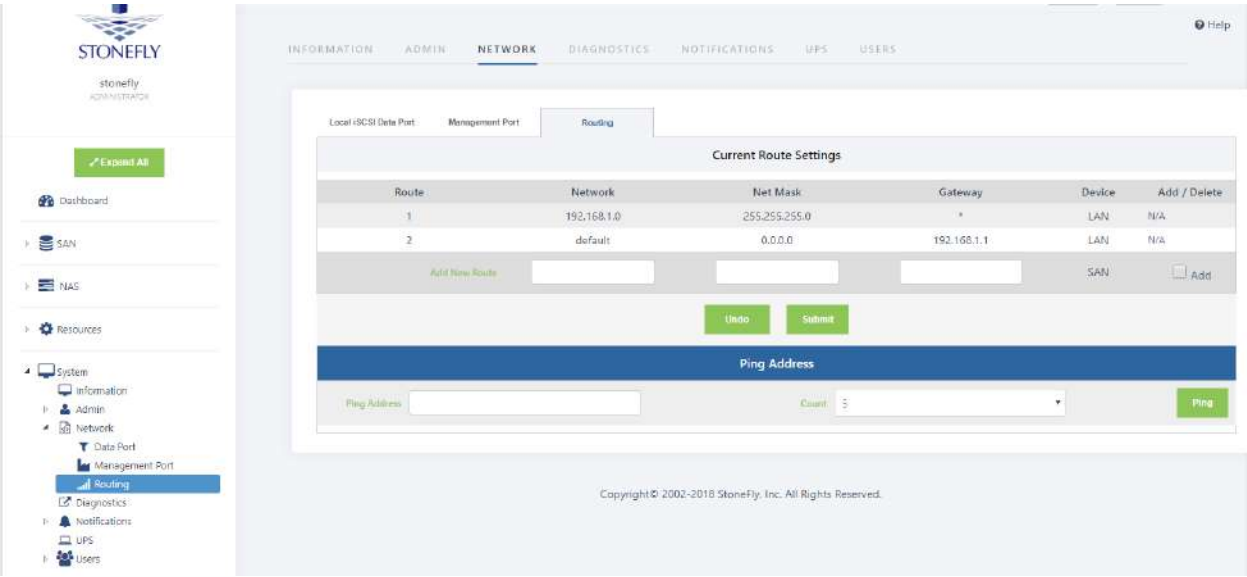

USO-HA System Management Network Routing screen

In the **Add New Route** fields, enter the **Network**, **Netmask**, and **Gateway** settings for the new route.

Click the **Add** check box.

Click **Submit**.

Navigate to **Admin > General**. The System Admin screen will appear. The *USO* must be rebooted for the new routing settings to be recognized.

Click **Reboot**.

Confirming Setup

To confirm that the *USO-HA* is configured properly, do the following:

Launch your web browser. In the URL address field, type the IP address you set up for the Management LAN port during the configuration process. Be sure to include **https://** in the address.

The browser will display an alert regarding the security certificate for the site. This occurs because the IP address for the *USO-HA* was changed from the factory default to one appropriate for your network.

Follow the screen prompts to accept the certificate. The number of screens will vary depending on which browser you are using. When the security certificate is accepted, the *USO-HA* administrative interface login screen will appear.

Click on **System** and then **Network** to confirm the network settings.

Click on **Data Port** and confirm the settings.

Click on **Management Port** and confirm the settings.

Click on **Routing** and confirm the settings.

Now that you have completed all of the steps on the Primary Storage Concentrator, return to Section 4.2 on page 38 and repeat all of the same steps on the Secondary Storage Concentrator.

Technical Support

For further support, please call technical support at 1-510-265-1616 option 3. Or send email to technical support at Support@StoneFly.com.

© 2022 StoneFly, Inc. | All Rights Reserved.

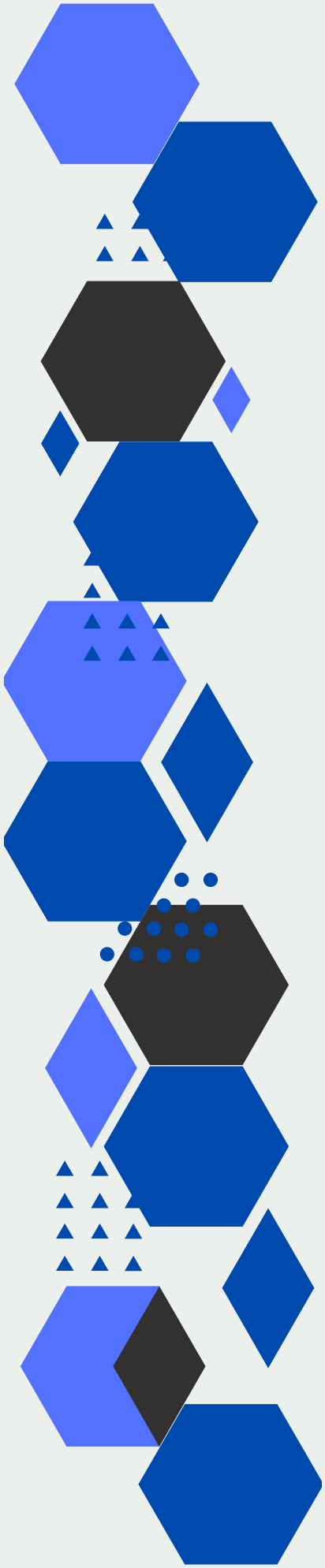

STONEFLY

www.stonefly.com
2865, 2869 and 2879
Grove Way, Castro
Valley, CA 94546 USA.
+1 (510) 265-1616
support@stonefly.com