Setup Guide

USC

Unified Storage Concentrator
NAS + SAN Gateway Solution

2U Storage Controller

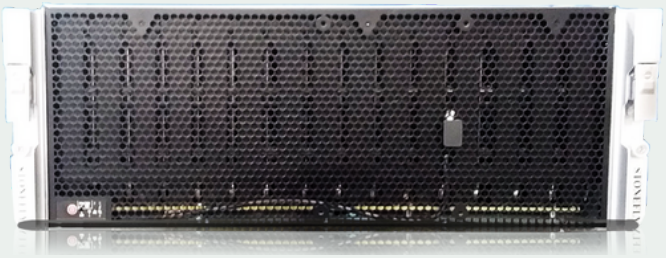

60-bay 4U Storage Expansion Unit

© 2022 StoneFly, Inc. | All Rights Reserved

This page is intentionally left blank.

Copyright © 2006 - 2022 StoneFly, Inc.

All rights are reserved. No part of this document may be photocopied or reproduced without the prior written consent of StoneFly.

The information contained in this document is subject to change without notice. StoneFly shall not be liable for errors contained herein or for consequential damages in connection with the furnishing, performance, or use of this material.

StoneFly, the StoneFly logo, Storage Concentrator, Integrated Storage Concentrator, ISC, Modular Storage Concentrator, StoneFly Backup Advantage, StoneFusion, StoneFly Replicator CDP, ValueSAN, Unified Scale Out, USO, Super Scale Out, SSO, Twin Scale Out, TSO, Unified Storage & Server, USS, Unified Deduplicated Storage, UDS, Unified Encrypted Storage, UES, OptiSAN, StoneFly Voyager, DR365, DR365 Fusion, StoneFly Mirroring, Storage Concentrator Virtual Machine, SCVM, Software-Defined Unified Storage, SDUS, and StoneFly Cloud Drive are property of StoneFly, Inc.

Other brands and their products are trademarks or registered trademarks of their respective holders.

Last update 02/2022

Contents

1.1 Introduction 6
1.1.1 Other Resources 6
1.2 Conventions 7
1.2.1 Icons 7
2.1 Product Overview 9
2.1.1 USC Features and Benefits 10
2.2 Theory of Operation 11
2.2.1 iSCSI Overview 11
2.2.2 IP SAN Configuration Overview 11
2.2.3 Network Attached Storage (NAS) 11
2.2.4 iSCSI Host Initiators 12
2.2.5 Expansion Storage 12
2.3 Installation Requirements 12
2.4 Safety Information 13
2.4.1 Environmental 13
2.4.2 Compliance 13
2.5 Product Registration 14
2.6 Contacting StoneFly for Help 14
3.1 Setting up the USC 16
3.1.1 Unpacking 16
3.1.2 Mounting USC Appliance 16
Identifying the Sections of the Rack Rails 17
Releasing the Inner Rail 18
Sliding the Chassis onto the Rack Rails 21
Installing the Chassis into a Rack 21
3.1.3 Mounting Expansion Unit 22
Identifying the Rails 22
Releasing the Inner Rail 23
Installing the Outer Rails onto the Rack 25
Installing the Chassis into a Rack 26
Removing the Chassis from the Rack 27
Installing the Cable Management Arm 28
3.2 Cabling the System(s) 31

3.2.1 StoneFly USC Appliance Cabling 31
3.2.2 Expansion Unit Connections 32
3.3 Configuring IPMI KVM 33
Accessing the IPMI Interface 37
3.1.4 Configuring the Network Settings for the USC's Management Port 39
3.1.5 Initial Configuration of the StoneFly USC Appliance 41
3.1.6 Setting up Routing 48
3.1.7 Confirming Setup 49
3.1.8 Steps to Complete Before Setting Up the System: 50
3.1.9 Attaching and Removing the Front Bezel 50
3.1.10 Finalizing the Setup 50

Chapter-1: Introduction

1.1 Introduction

This guide provides the information needed to perform the out-of-the-box setup and configuration tasks for the StoneFly Unified Storage Concentrator (USC) Modular NAS + SAN gateway appliance.

After completing the steps in this guide, proceed to the *StoneFly Storage Concentrator User's Guide*. Refer to "Chapter 2 – Administrative Interface" for information on how to efficiently and effectively manage data storage, data protection, and data delivery on your network.

This setup guide is intended to be used by network administrators and assumes a basic understanding of:

- Local Area Networks (LAN)
- Ethernet and Ethernet-switching concepts
- Storage Area Networking (SAN)

1.1.1 Other Resources

Other useful information regarding the setup and use of your *USC* can be found in the following places:

- StoneFly Storage Concentrator User's Guide
- The StoneFly Web site: http://www.stonefly.com
- The USC Online Help in the administrative interface (following initial setup)

1.2 Conventions

The table that follows lists the conventions used throughout this Setup Guide.

1.2.1 Icons

Icon	Type	Description
	Note	Special instructions or information
	Warning	Risk of system damage or a loss of data

Chapter-2: Overview

2.1 Product Overview

Based on the StoneFusion operating system, the USC delivers iSCSI target volumes to hosts over TCP connections in an Ethernet network and offers Network Attached Storage (NAS) volumes which allow multiple hosts/users to share files.

Configuring and managing USC is accomplished using a browser-based graphical user interface (GUI) resident in the USC. Storage resources are connected to the USC through one or more expansion units connected to the external 12Gb SAS port. The system administrator uses the GUI to allocate blocks of storage to create the iSCSI target volumes and authorizes their use by individual host systems and/or to create NAS segments and volumes.

USC 2U Storage Controller (with front bezel)

The USC comes pre-configured with the RAID configuration you specified during the ordering process. To change the RAID configuration settings you must use the RAID configuration utility for the USC. Please consult the RAID Controller Manual.

The USC features a management port, IPMI port, SAS expansion port, and two or more 10Gb network connections (number and type of network connections matching what you specified during the ordering process). Select models include optional FC SAN Target ports if the FC SAN Target package was ordered.

2.1.1 USC Features and Benefits

The following table details additional features of the USC.

Feature	Benefits
IP network-based SAN intelligence based on StoneFusion OS	✓ Less expensive to install and operate ✓ Universal connectivity on IP networks ✓ Uses existing network ✓ No retraining of personnel on new technologies ✓ Lowers total cost of ownership ✓ No distance limitations for IP networks
Storage Provisioning	✓ Add, delete, or expand volumes easily ✓ Maximizes utilization of storage resources ✓ Responds to changes quickly
Mirroring	✓ Supports both local and remote, synchronous and asynchronous mirroring with StoneFly Reflection™ and StoneFly Replicator® CDP software
Disk-to-Disk backup	✓ Simultaneous backup streams from multiple servers for faster, more reliable backups ✓ Nearly instantaneous restores from disk
HTML-based GUI management	✓ Centralized storage management, control and monitoring of provisioned storage pools ✓ Access and administer changes from a browser anywhere at anytime ✓ Secure access (https) ✓ Easy and intuitive to use
Security	✓ Access Control Lists designate which storage resources are accessible to which hosts and specify read/write, read only, or no access privileges ✓ CHAP (Challenge Handshake Authentication Protocol) supports passwords at the host or volume level
Expandable storage capacity with additional storage resources (optional)	✓ Works with SAS JBODs containing SAS drives.
High availability	✓ Access local and remote copies of user configuration data

Object storage resources	✓ Integrated cloud connection to Microsoft Azure Blob Storage, Amazon AWS S3 and/or compatible AWS S3 storage

2.2 Theory of Operation

The StoneFly USC™ is the mediator between hosts and storage devices in an IP network. IP-based Storage Area Networks (IP SANs) use the iSCSI protocol over an Ethernet and TCP/IP network. USC also offers Network Attached Storage (NAS) which allows multiple host/users share files over an Ethernet network. Each server, host, or user that needs access to the SAN storage devices must implement the iSCSI protocol over an Ethernet and TCP/IP network.

2.2.1 iSCSI Overview

iSCSI is a protocol that enables the transmission of block-level data between storage resources and computers over an IP network. iSCSI combines Ethernet-based IP networking with the SCSI (small computer systems interface) command set—the core command set used in most storage configurations. By combining SCSI and IP networking, iSCSI incorporates the two most widely used storage and networking protocols.

2.2.2 IP SAN Configuration Overview

There are two components which must be considered when setting up the USC:

1. iSCSI host initiators
2. Expansion Units (optional)

2.2.3 Network Attached Storage (NAS)

Network Attached Storage (NAS) is a storage technology that allows users to create shared volumes that can be accessed by one or more users. The difference between iSCSI volumes and NAS volumes are that NAS volumes (NAS shares) can be accessed by more than one user/server, but iSCSI volumes in general can only be accessed by one server.

© 2022 StoneFly, Inc.

2.2.4 iSCSI Host Initiators

An iSCSI host initiator is the component of a server that "initiates" or originates storage commands. There are three ways to set up iSCSI host initiators to work with the USC:

1. Using software-based iSCSI initiators on hosts that are connected to the storage network and "see" logical volumes as disk drives. This configuration requires a NIC (Network Interface Card) to connect to the 10Gb Ethernet network.
2. Using an iSCSI adapter that interfaces with the host operating system (OS) in the same way as a storage Host Bus Adapter (HBA).
3. Using a TCP Offload Engine (TOE) adapter card to offload the computing-intensive processing associated with maintaining a TCP/IP connection. A typical implementation includes both a software and a hardware component.

2.2.5 Expansion Storage

One of the major benefits of the USC appliance is the ability to expand using optional expansion units to "scale up" the storage capacity. StoneFly Expansions Units are SAS-attached JBODs (Just a Bunch of Disks) that house SAS drives. The Expansion Units connect directly to the 12Gb SAS expansion port on the rear of the USC appliance.

The USC mediates requests from host servers for storage resources, just as servers mediate storage requests from end-user clients on the network. Therefore, it is prudent to set up the USC on a dedicated storage network that is operating independently of the LAN that mediates traffic between clients and hosts.

It is recommended that you setup a dedicated subnet running on a Gigabit network to prevent management of the USC from interfering with data I/O traffic.

2.3 Installation Requirements

The following minimum network system requirements must be met before attempting to install the StoneFly USC appliance:

1. Connectivity to a 10Gb Ethernet network for data.
2. Connectivity to a Gigabit or better Ethernet network for management.
3. Storage resources (devices) are either internal drives or coming from expansion unit(s) connected to an external SAS port.
4. The Computer must have one of the following browsers:
    A. FireFox 1.0 or later or Netscape 4.7 or later (Windows PC or Linux)
    B. Internet Explorer 5.0 or later (Windows PC only)

2.4 Safety Information

Please review the following safety information completely before installing your USC appliance.

2.4.1 Environmental

Requirements for power and network availability must be taken into consideration when planning where to place your USC. The space should have well-regulated temperature and humidity and should be relatively free of dust and other contaminants. The list below provides specifics on the environmental requirements:

Operating temperature: +50°F to +95°F (10°C to 35°C)

Altitude: -50 to 10,000 feet (-16 to 3048 meters)

Relative humidity: 8% to 90% (non-condensing)

2.4.2 Compliance

FCC 47 CFR Part 15, Class A
CSA C1088, Class A
UL 60950; CUL 60950
CE Mark (EN 455022, Class A/EN 455024)

2.5 Product Registration

To initiate StoneFly customer service for your product, you must first register your USC appliance. Go to the StoneFly website at http://www.stonefly.com/support or Mail in the registration card that was included with your USC appliance or email the information below to support@stonefly.com:

- Appliance Model Number
- Appliance Serial Number (begins with D500 and is located on the rear of the chassis)
- Date of Purchase
- Company Name
- Address (including City, State, Zip)
- Contact Name
- Phone Number
- Email Address
- Dealer's Name (if purchased from a reseller or distributor)

2.6 Contacting StoneFly for Help

You can reach StoneFly technical support by any of the three following methods:

- Send an email to support@stonefly.com.
- Visit https://stonefly.com/support and fill out the contact form.
- Call 510.265.1616 and select support from the menu.

Please have the following information available when contacting StoneFly technical support for assistance:

- Appliance Model Number
- Appliance Serial Number (begins with D500 and is located on the rear of the chassis)
- Company Name
- Contact Name
- Phone Number
- Email Address
- Software Version
- Initiator Versions (if using iSCSI)
- Description of the Problem

Chapter-3: Initial Installation

3.1 Setting up the USC

This section will provide step-by-step instructions for initial system configuration and hardware setup of the StoneFly USC appliance.

3.1.1 Unpacking

Unpack the hardware from the box. You will find:

1. The StoneFly USC appliance
2. The front bezel for the USC
3. Power cords
4. A product registration card for the USC
5. A documentation CD with the *StoneFly Storage Concentrator User's Guide* and all other documentation

3.1.2 Mounting USC Appliance

Mounting rails for the USC are included in the package. One set of rails is required for rack mounting each USC.

This section is written for 2U USC, but other USC rack installations are similar.

This guide provides information on installing the StoneFly USC chassis into a rack unit with the rails provided. There are a variety of rack/cabinet units on the market, which may mean the assembly procedure will differ slightly. You should also refer to the installation instructions that came with the rack unit you are using.

NOTE: This rail will fit a rack/cabinet between 26.8" and 36.4" deep.

© 2022 StoneFly, Inc.

Identifying the Sections of the Rack Rails

The StoneFly USC chassis package includes two rack rail assemblies in the rack mounting kit. Each assembly consists of three sections: an inner rail that secures directly to the chassis, an outer rail that secures to the rack, and a middle rail which extends from the outer rail. These assemblies are specifically designed for the left and right side of the chassis.

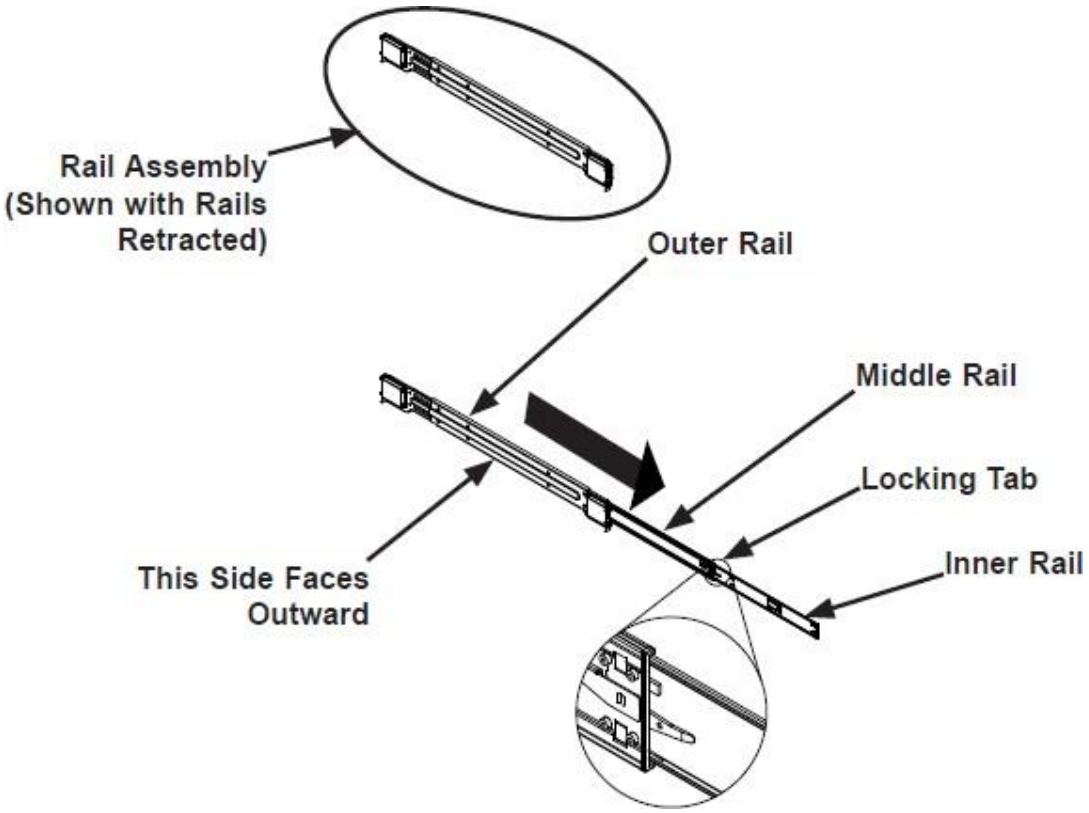

Identifying the Outer Rail, Middle Rail and Inner Rail

(Left Rail Assembly Shown)

Releasing the Inner Rail

Each inner rail has a locking latch. This latch prevents the server from coming completely out of the rack when the chassis is pulled out for servicing. To mount the rail onto the chassis, first release the inner rail from the outer rails.

Releasing the Inner Rail from the Outer Rails:

1. Pull the inner rail out of the outer rail until it is fully extended as illustrated below.
2. Press the locking tab down to release the inner rail.
3. Pull the inner rail all the way out.
4. Repeat for the other outer rail.

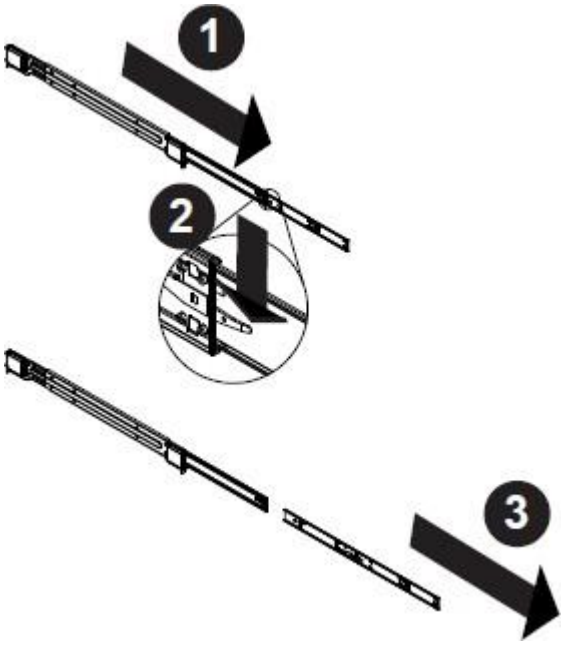

Extending and Releasing the Inner Rail

Installing the Inner Rails on the Chassis

Installing the Inner Rails

1. Identify the left and right inner rails. They are labeled.
2. Place the inner rail firmly against the side of the chassis, aligning the hooks on the side of the chassis with the holes in the inner rail.
3. Slide the inner rail forward toward the front of the chassis until the quick release bracket snaps into place, securing the rail to the chassis.
4. Optionally, you can further secure the inner rail to the chassis with a screw.
5. Repeat for the other inner rail.

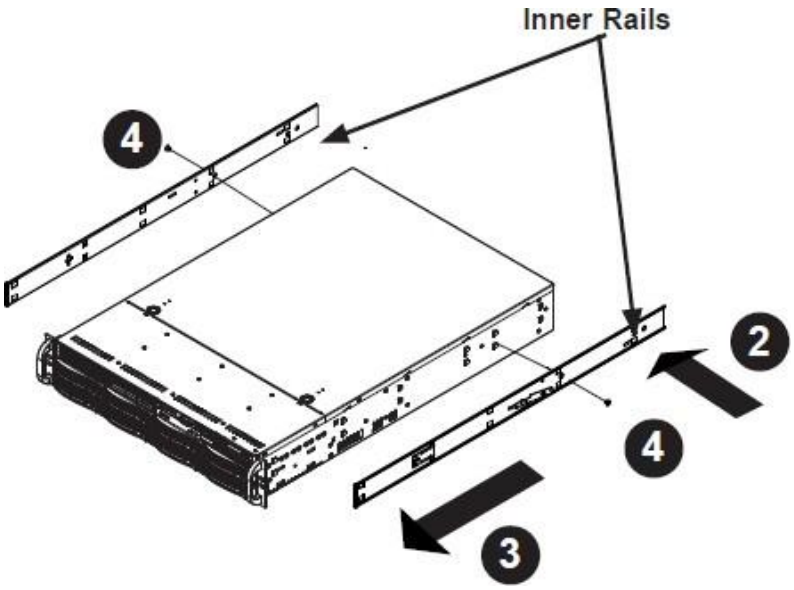

Installing the Inner Rails

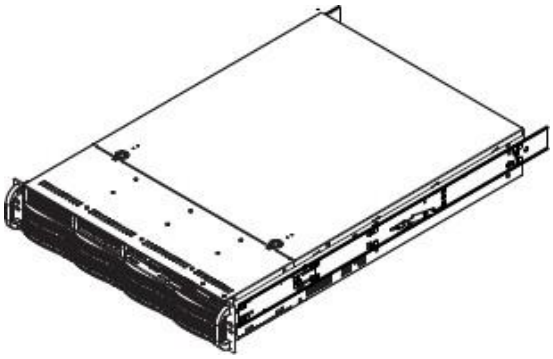

Inner Rails Installed on the Chassis

Installing the Outer Rails onto the Rack

Installing the Outer Rails

1. Press upward on the locking tab at the rear end of the middle rail.
2. Push the middle rail back into the outer rail.
3. Hang the hooks on the front of the outer rail onto the square holes on the front of the rack. If desired, use screws to secure the outer rails to the rack.
4. Pull out the rear of the outer rail, adjusting the length until it just fits within the posts of the rack.
5. Hang the hooks of the rear section of the outer rail onto the square holes on the rear of the rack. Take care that the proper holes are used so the rails are level. If desired, use screws to secure the rear of the outer rail to the rear of the rack.

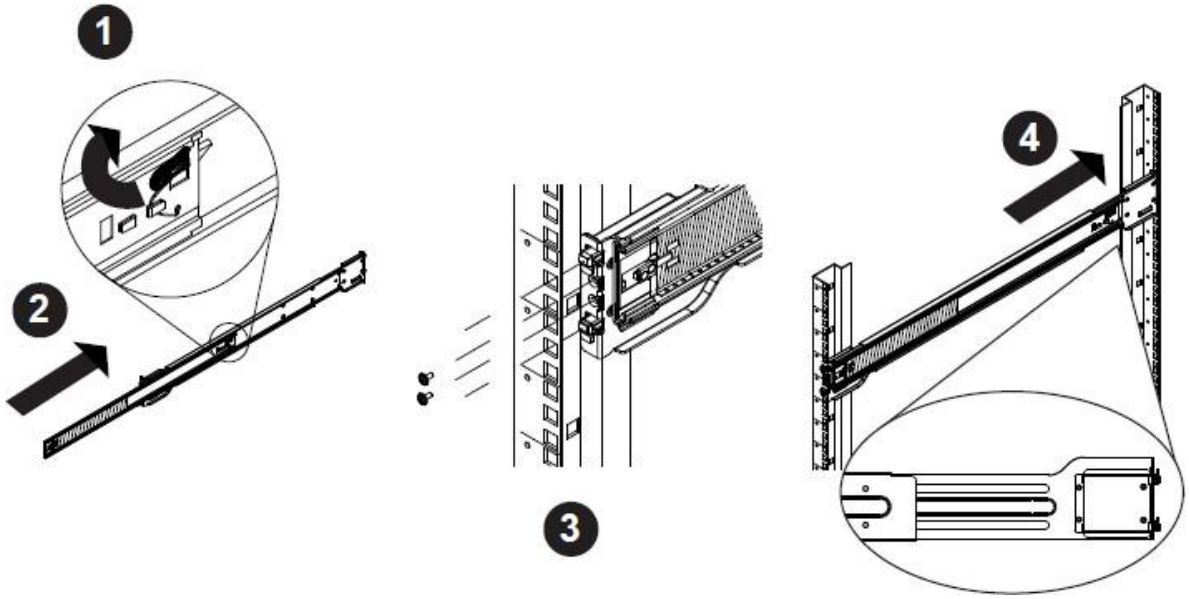

Extending and Mounting the Outer Rails

The rack stabilizing mechanism must be in place, or the rack must be bolted to the floor before you slide the unit out for servicing.

Failure to stabilize the rack can cause the rack to tip over. Do not use a two post “telco” type rack.

Sliding the Chassis onto the Rack Rails

Warning: Mounting the system into the rack requires at least two people to support the chassis during installation. Please follow the safety recommendations printed on the rails.

Installing the Chassis into a Rack

1. Extend the outer rails as illustrated above.
2. Align the inner rails of the chassis with the outer rails on the rack.
3. Slide the inner rails into the outer rails, keeping the pressure even on both sides. When the chassis has been pushed completely into the rack, it should click into the locked position.
4. Optional screws may be used to hold the front of the chassis to the rack.

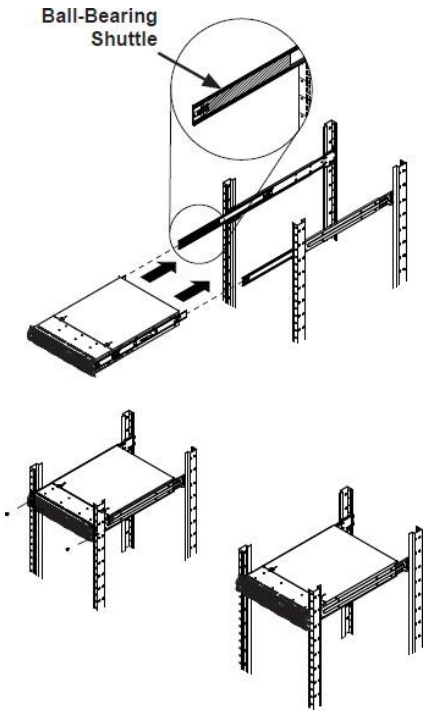

Installing the Chassis into a Rack

Note: The figure above is for illustrative purposes only. Always install servers to the bottom of the rack first.

Caution: Do not pick up the server with the front handles. They are designed to pull the system from a rack only.

3.1.3 Mounting Expansion Unit

This rail set fits a rack between 26.5" and 36.4" deep. Do not use a two post "telco" type rack. The following is a basic guideline for installing the system into a rack with the rack mounting hardware provided. You should also refer to the installation instructions that came with the specific rack you are using.

Identifying the Rails

The chassis package includes two rail assemblies. Each assembly consists of three sections: An inner rail that secures directly to the chassis, an outer rail that secures to the rack, and a middle rail which extends from the outer rail. These assemblies are specifically designed for the left and right side of the chassis and labeled.

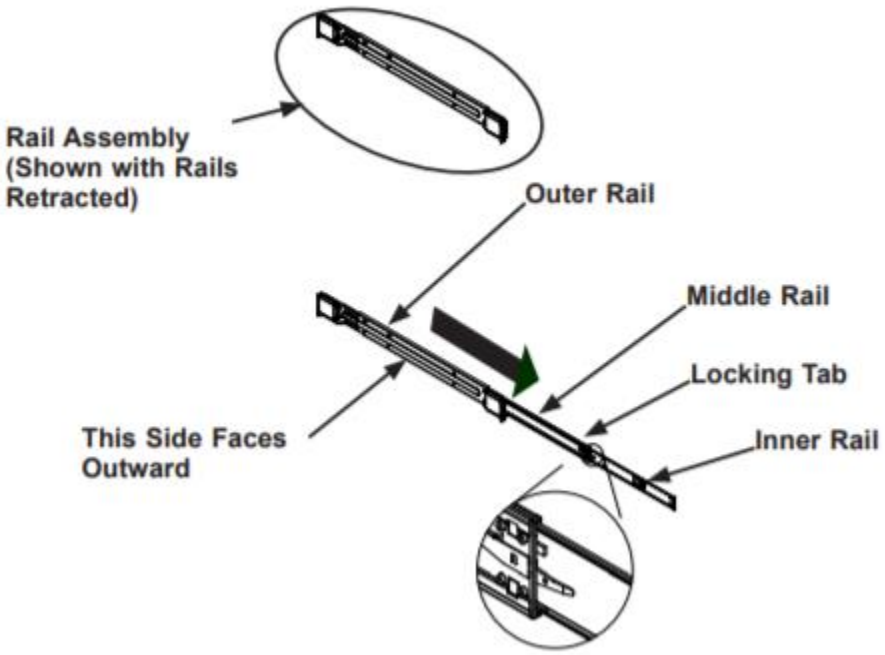

Identifying the Outer Rail, Middle Rail and Inner Rail

(Left Rail Assembly Shown)

Both front chassis rails and the rack rails have a locking tab, which serves two functions. First, it locks the server into place when installed and pushed fully into the rack (its normal operating position. In addition, these tabs lock the server in place when fully extended from the rack. This prevents the server from coming completely out of the rack when pulled out for servicing.

Releasing the Inner Rail

Each inner rail has a locking latch. This latch prevents the server from coming completely out of the rack when when the chassis is pulled out for servicing.

To mount the rail onto the chassis, first release the inner rail from the outer rails.

1. Pull the inner rail out of the outer rail until it is fully extended as illustrated below.
2. Press the locking tab down to release the inner rail.
3. Pull the inner rail all the way out.

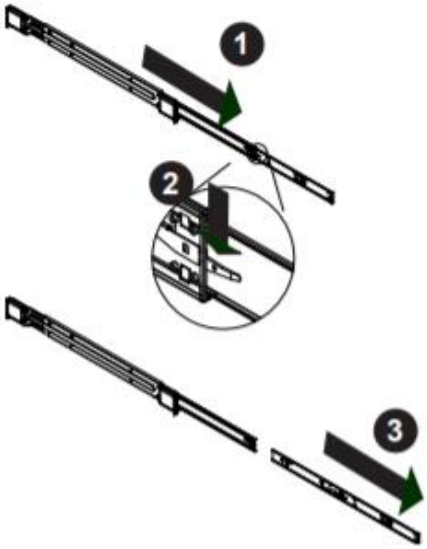

Extending and Releasing the Inner Rail

Installing the Inner Rails

Begin the rack mounting procedure by installing the inner rails to the chassis.

1. Identify the left and right inner rails. They are labeled.
2. Place the inner rail firmly against the side of the chassis, aligning the hooks on the side of the chassis with the holes in the inner rail.
3. Slide the inner rail forward toward the front of the chassis and under the hooks until the quick release bracket snaps into place, securing the rail to the chassis.
4. If desired, secure the rail to the chassis with a screw.

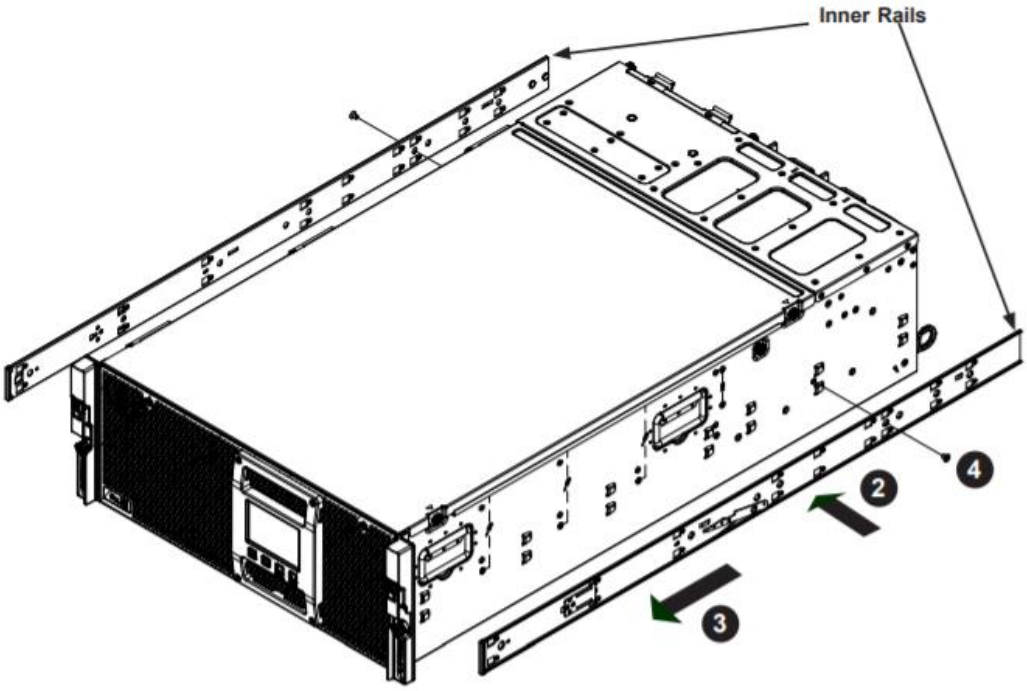

Installing the Rails

Do not pick up the server with the front handles. They are designed to pull the system from a rack only

Installing the Outer Rails onto the Rack

Each end of the assembled outer rail includes a bracket with square pegs to fit into your rack holes. If you have an older rack with round holes, modification kits are available.

1. Align the square pegs on the front end of the rail with the square holes on the front of the rack (C). Push the rail into the rack until the quick release bracket snaps into place, securing the rail to the rack. Keep the rail horizontal.
2. Adjust the rail to reach just past the full depth of your rack making sure that rear bracket is level with the front bracket.
3. Align the square pegs on the rear end of the rail to the holes on the rack (D) and push the rail into the rack until the quick release bracket snaps into place, securing the rail to the rack.
4. Repeat the procedure for the other outer rail assembly.

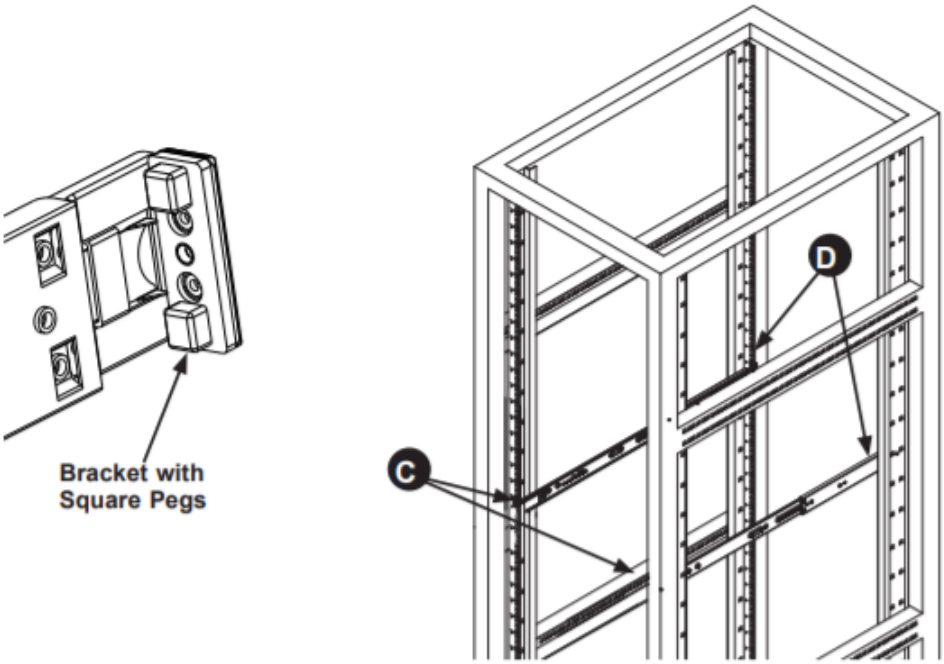

Installing the OuterRails to the Rack

Figure is for illustrative purposes only. Always install servers at the bottom of a rack first.

Stability hazard: The rack stabilizing mechanism must be in place, or the rack must be bolted to the floor before you slide the unit out for servicing. Failure to stabilize the rack can cause the rack to tip over.

Installing the Chassis into a Rack

Once rails are attached to the chassis and the rack, you can install the server.

1. Pull the middle rail out of the front of the outer rail and make sure that the ball bearing shuttle is locked at the front of the middle rail.
2. Align the rear of the chassis rails with the middle rails and then push evenly on both sides of the chassis until it clicks into the fully extended position.
3. Depress the locking tabs on both sides of the chassis and push the it fully into the rack. The locking tabs should "click".
4. Optional screws may be used to hold the front of the chassis to the rack.

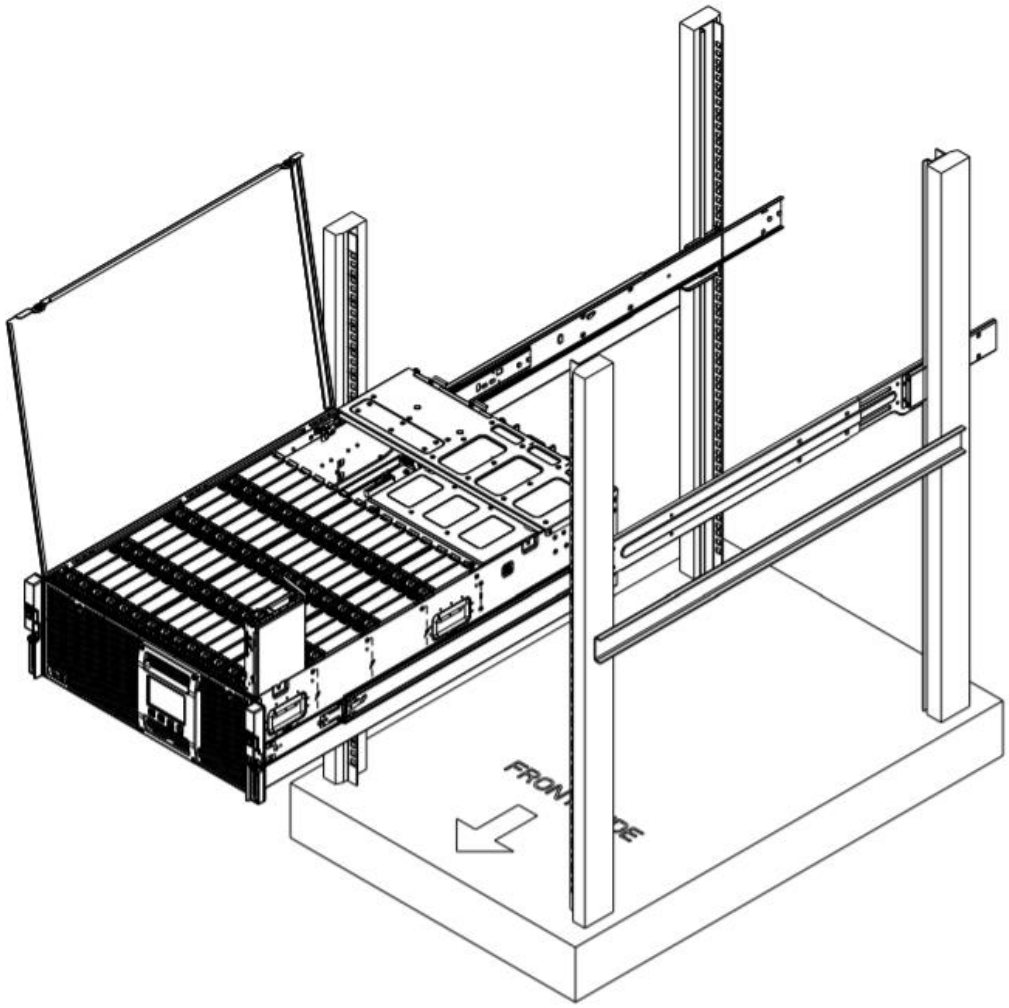

Installing the Server into the Rack

Keep the ball bearing shuttle locked at the front of the middle rail during installation.

Figure is for illustrative purposes only. Always install servers to the bottom of a rack first.

Removing the Chassis from the Rack

Caution! It is dangerous for a single person to off-load the heavy chassis from the rack without assistance. Be sure to have sufficient assistance supporting the chassis when removing it from the rack. Use a lift.

1. Pull the chassis forward out the front of the rack until it stops.
2. Press the release latches on each of the inner rails downward simultaneously and continue to pull the chassis forward and out of the rack.

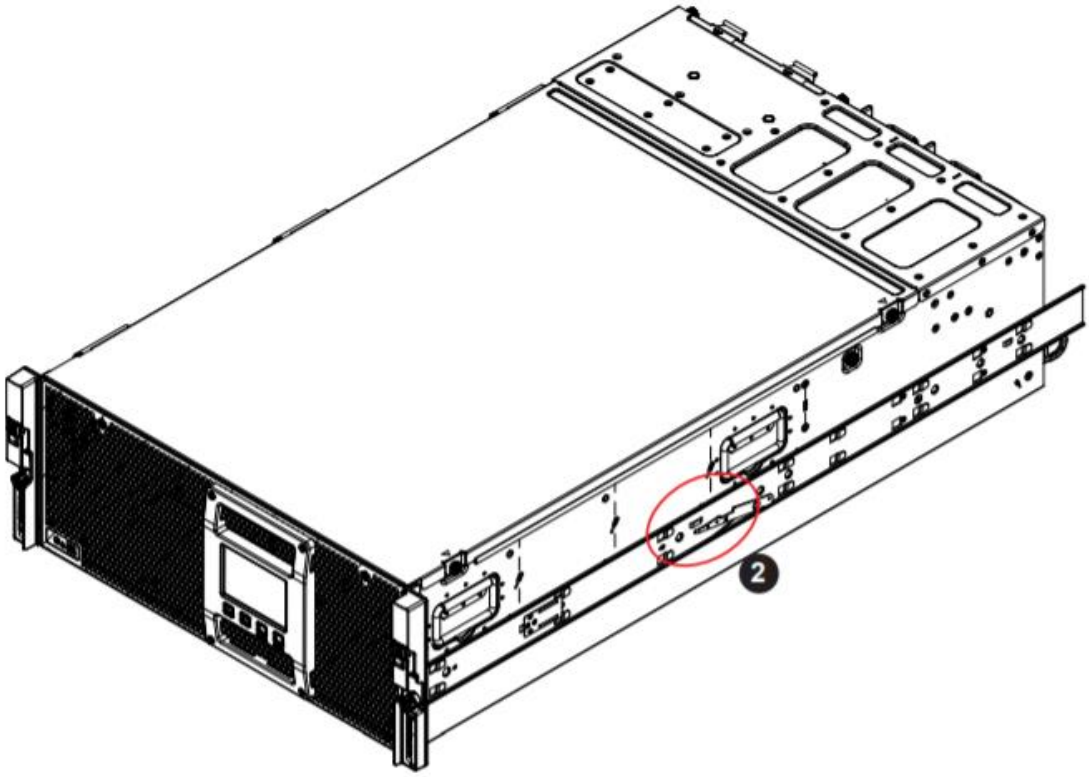

Removing the Chassis from the Rack

Installing the Cable Management Arm

The JBOD chassis supports a cable management arm (CMA) that keeps the rear cables organized and clear of the rail mechanisms when the system is extended out the front of the rack for maintenance. The kit includes six fabric Velcro cable ties. The CMA attaches to the rack mounting rails by means of four connectors. They are labeled on the connectors 1, 2, 3, and 4.

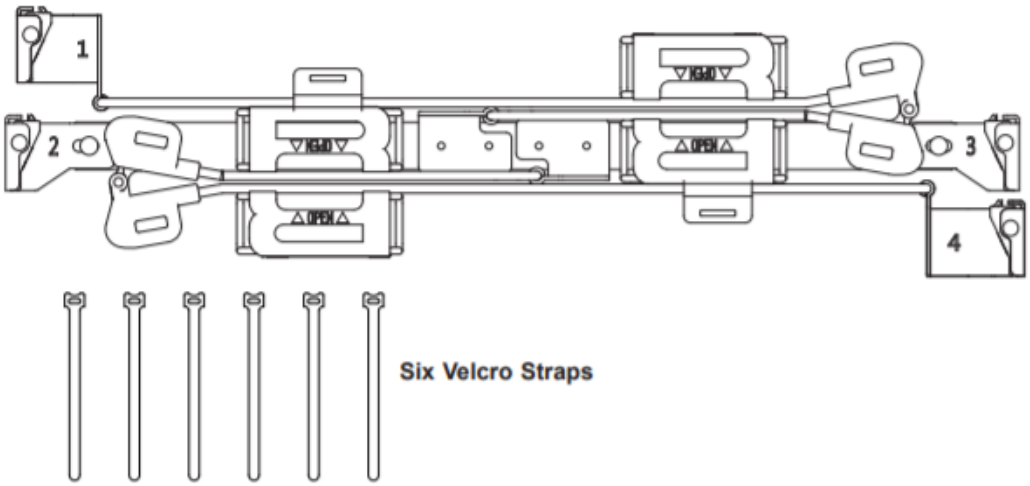

Cable Management Arm and Velcro Straps

Installing the Cable Management Arm

1. Slide CMA connector #1 forward onto the two posts on the rear of the right inner rail (right side when viewed from the front). It snaps into place.
2. 2. Slide CMA connector #2 forward onto the two posts on the rear of the right middle rail. It snaps into place.

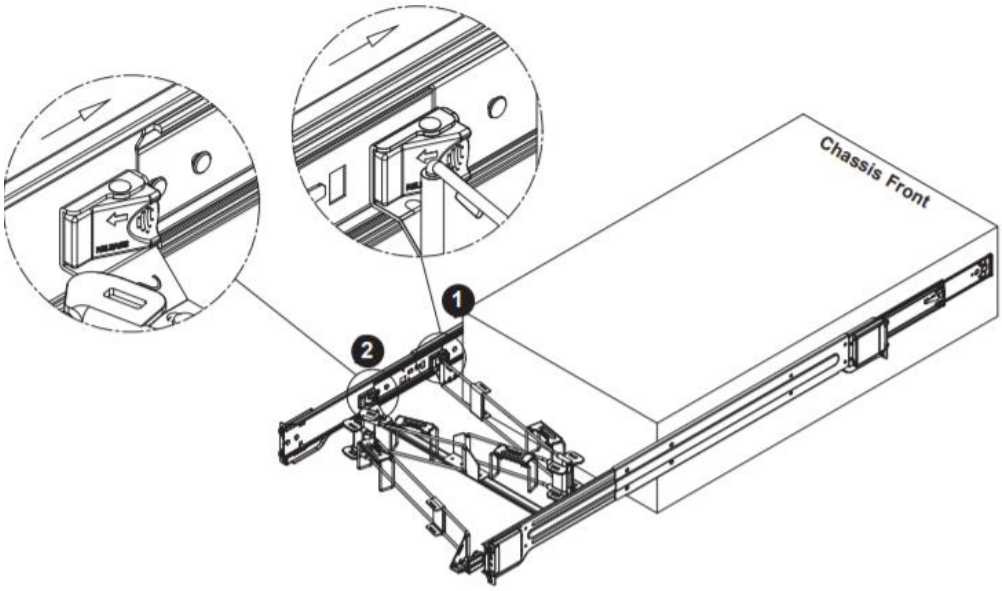

Installing the Connectors 1 and 2

3. Slide CMA connector #3 forward onto the two posts on the rear of the left middle rail. It snaps into place.
4. For CMA connector #4, align the metal tabs with the slots on the rear of the left outer rail and push it forward. It snaps into place.

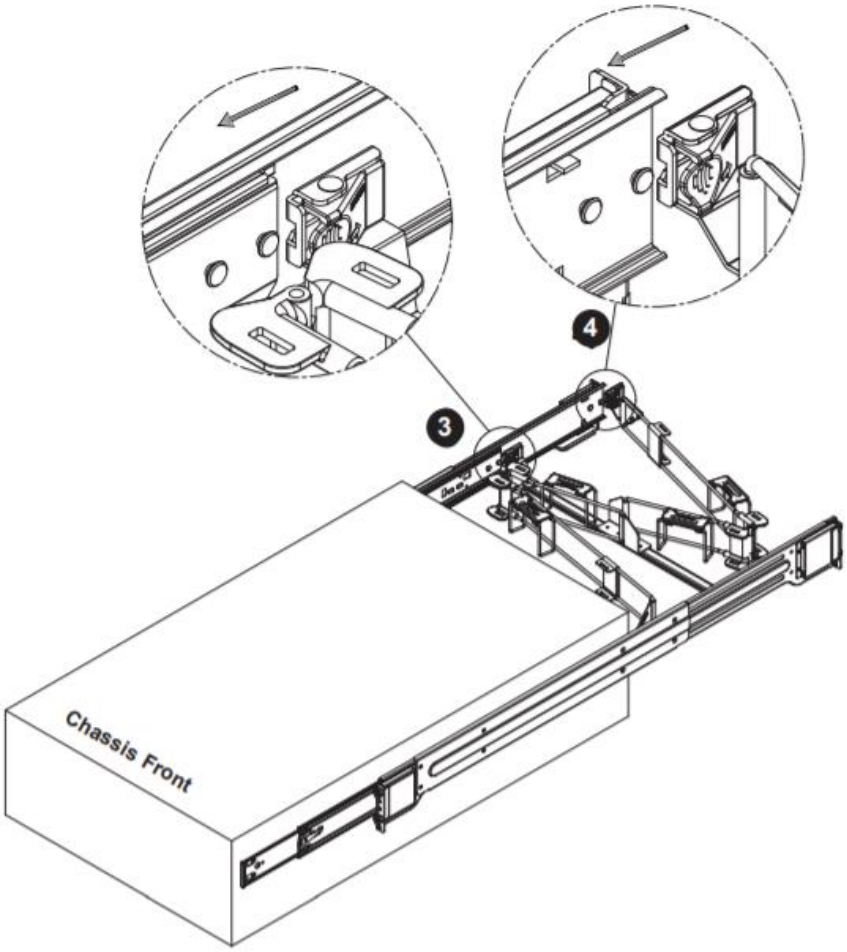

Installing the Connectors 3 and 4

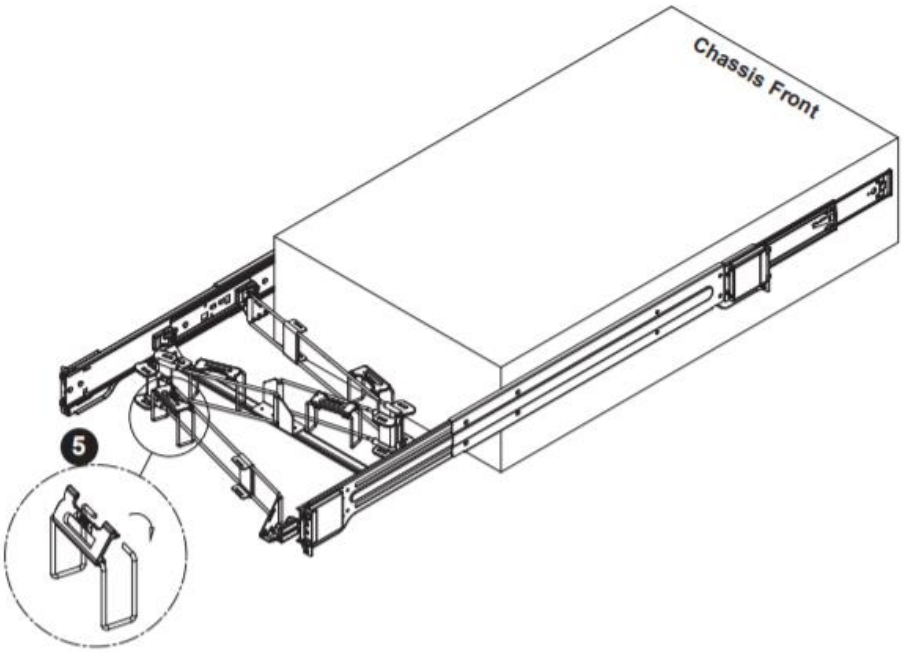

Routing the Cables

5. Open the four red plastic caps and route the cables into the wire carrier.
6. If necessary, adjust the U-brackets to clear chassis components.

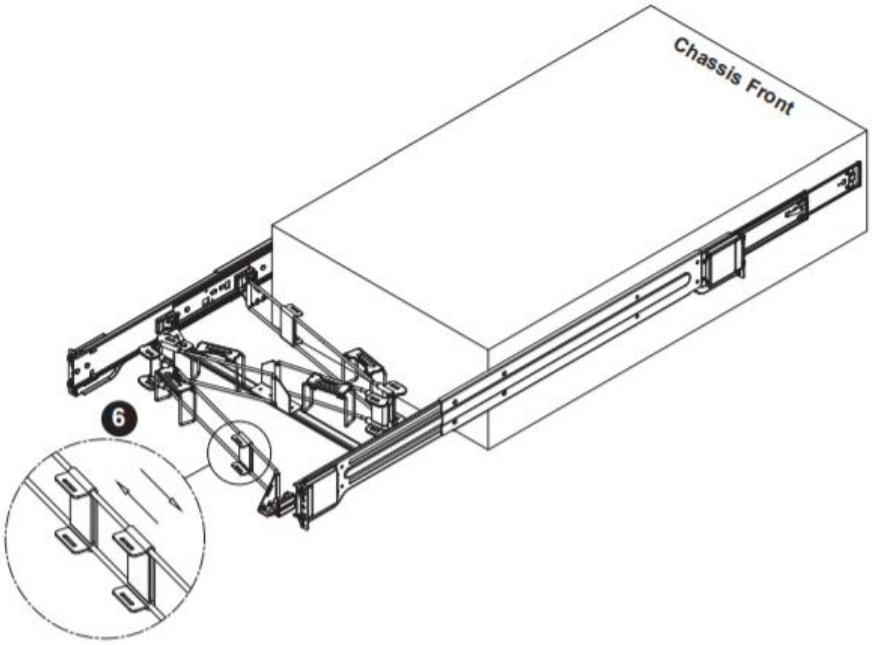

Adjusting the U-Brackets

7. Use the six Velcro straps to secure the cables to the CMA. Use a strap on either side of each joint and one on each U-bracket, inserting it through the slot on the bracket.
8. Slide the chassis forward and backward in the rack to confirm that the cable management arm is operating smoothly. If necessary, loosen the straps for smoother movement. If at some time you must remove the cable management arm, follow this procedure.

Removing the Cable Management Arm

1. Remove cables from the CMA, releasing the Velcro straps and the red plastic caps.
2. For CMA connector #4, pull the metal release tab toward the center of the rack and slide the connector toward the rear to release it.
3. For CMA connectors #3, #2, and #1, depress the front edge of the yellow plastic rocker lock, and slide the connector toward the rear to release it.

3.2 Cabling the System(s)

3.2.1 StoneFly USC Appliance Cabling

These are the steps a user needs to follow in order to start using the StoneFly USC Appliance:

1- Connect both power supply modules to a power outlet using the included power cords.

2- Connect Ethernet cables to the System Management, Network (iSCSI/NAS), and IPMI ports as shown in the diagram below:

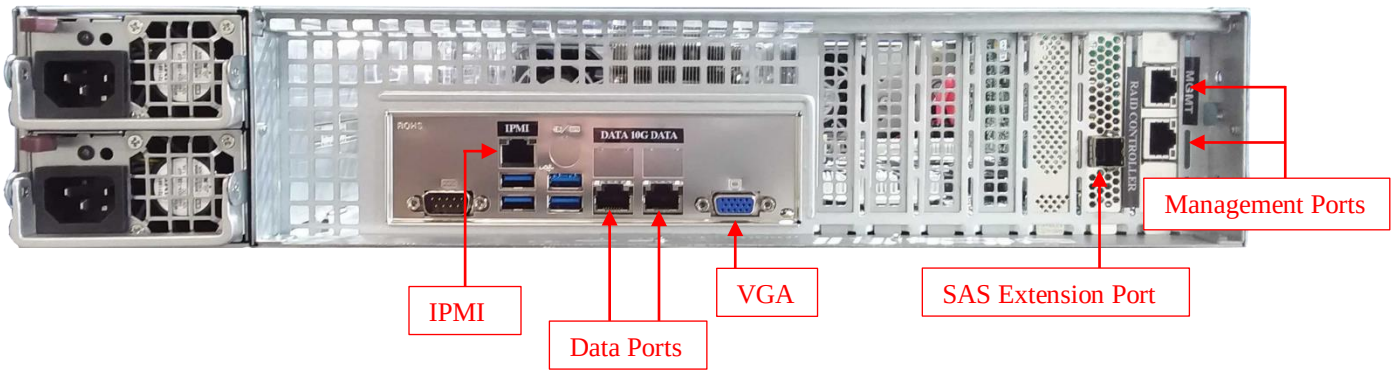

Back Panel Connections of the USC

3- If you purchased the appliance with additional network ports, then please connect those as well.

4- Connect a monitor to the VGA port.

5- Connect a keyboard and a mouse to the USB ports.

6- Power up (any) Expansion Units, then power up the USC appliance.

NOTE:

- Serial port is not used by the USC appliance.
- SAS Expansion port is only used when connecting StoneFly Expansion Units to the USC Appliance for additional storage capacity.
- Do not connect an Ethernet cable to the RAID port.
- There are different configurations for network ports. Make sure to follow the labeling on your system when connecting the Ethernet cables.

Spanning Tree Protocol (STP) must be disabled on your network switch when using bonded data ports on the StoneFly USC appliance

3.2.2 Expansion Unit Connections

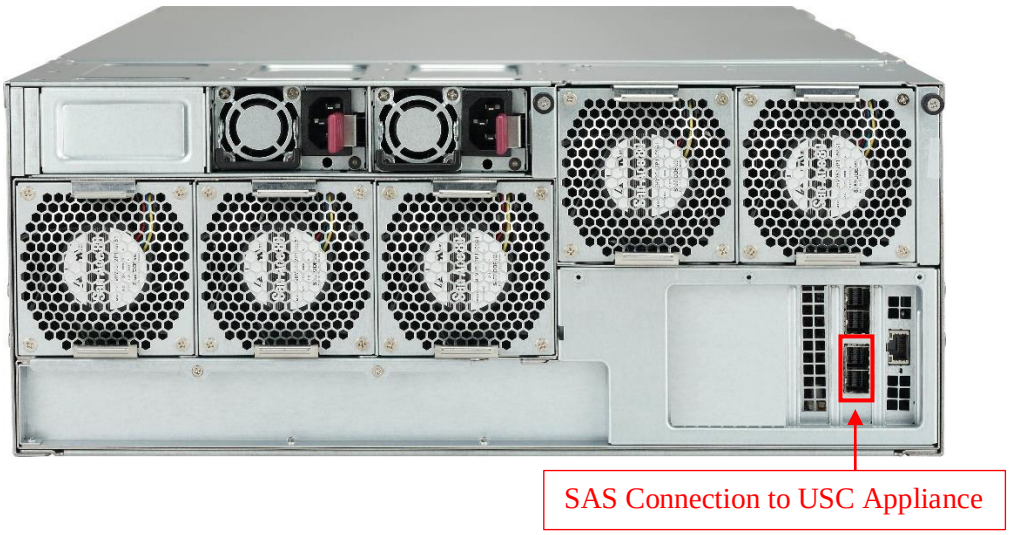

Back Panel Connections of the Storage Expansion Unit

3.3 Configuring IPMI KVM

The Intelligent Platform Management Interface (IPMI) KVM configuration allows for **Remote Management** and **Power Control** of the StoneFly USC system. This configuration is optional to perform, but recommended.

To configure the IPMI module, connect a keyboard and monitor to the system. Power on the system and press the **Del** key to enter the BIOS setup.

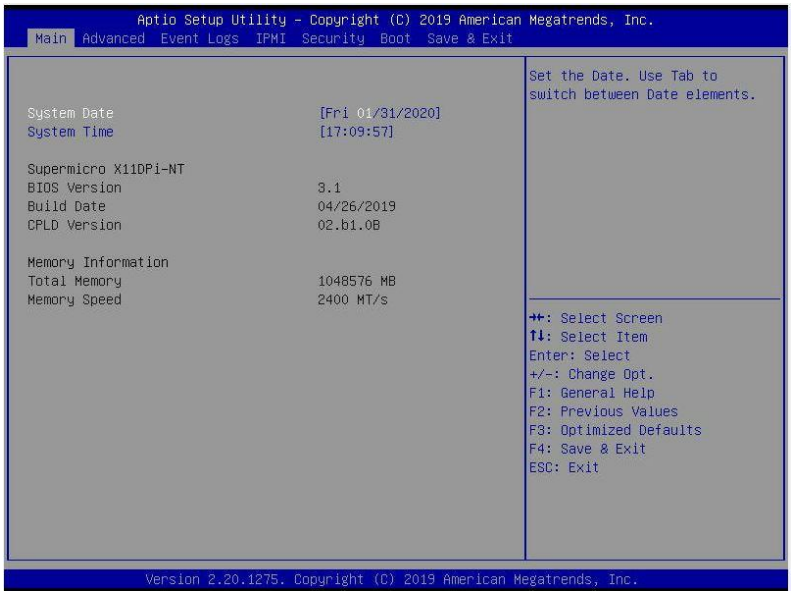

Navigate to **IPMI** tab and go to **BMC Network Configurations**:

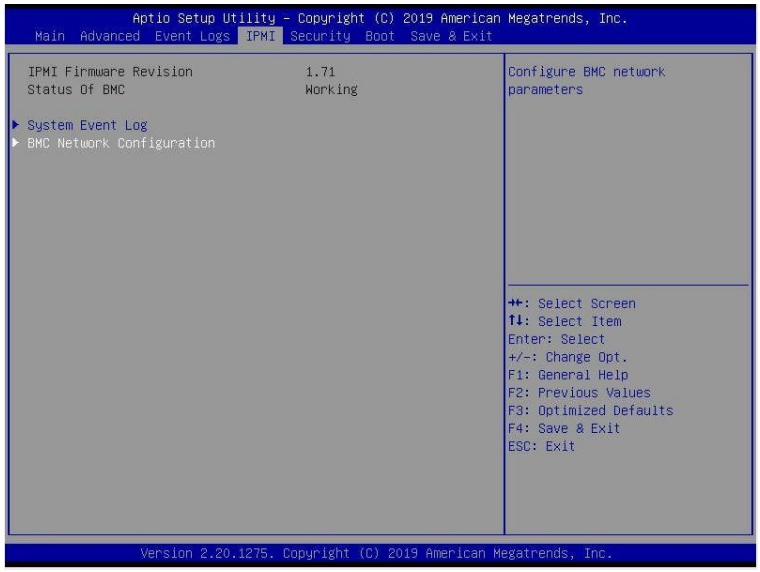

In the **BMC Network Configuration** tab, select **Update IPMI LAN Configuration** and press **Enter**:

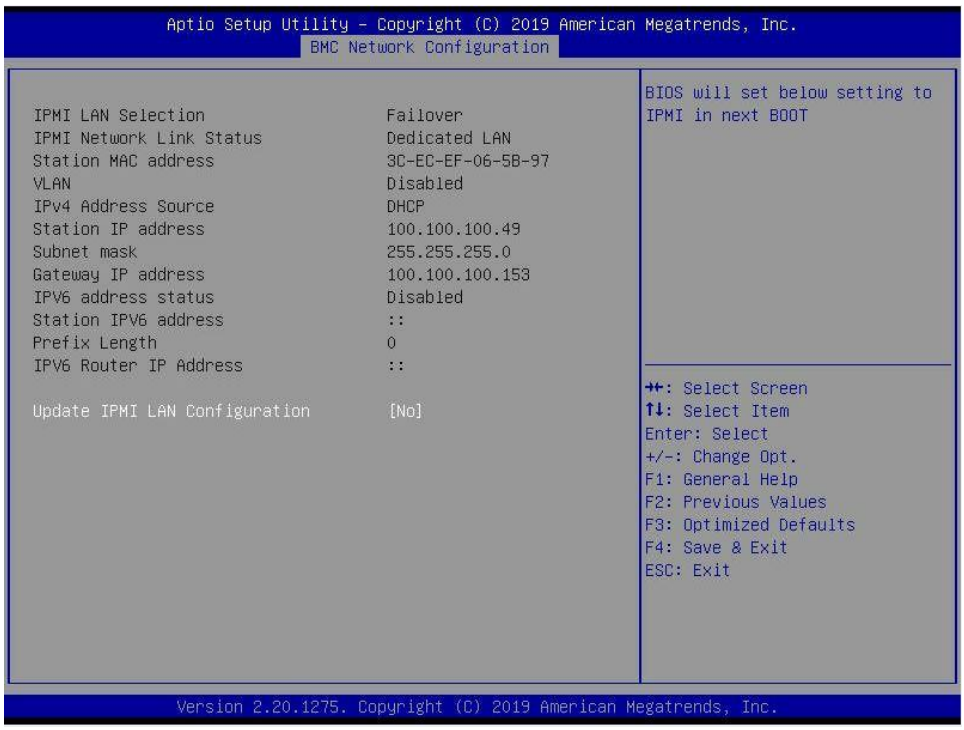

When prompted, select **Yes** and press **Enter**.

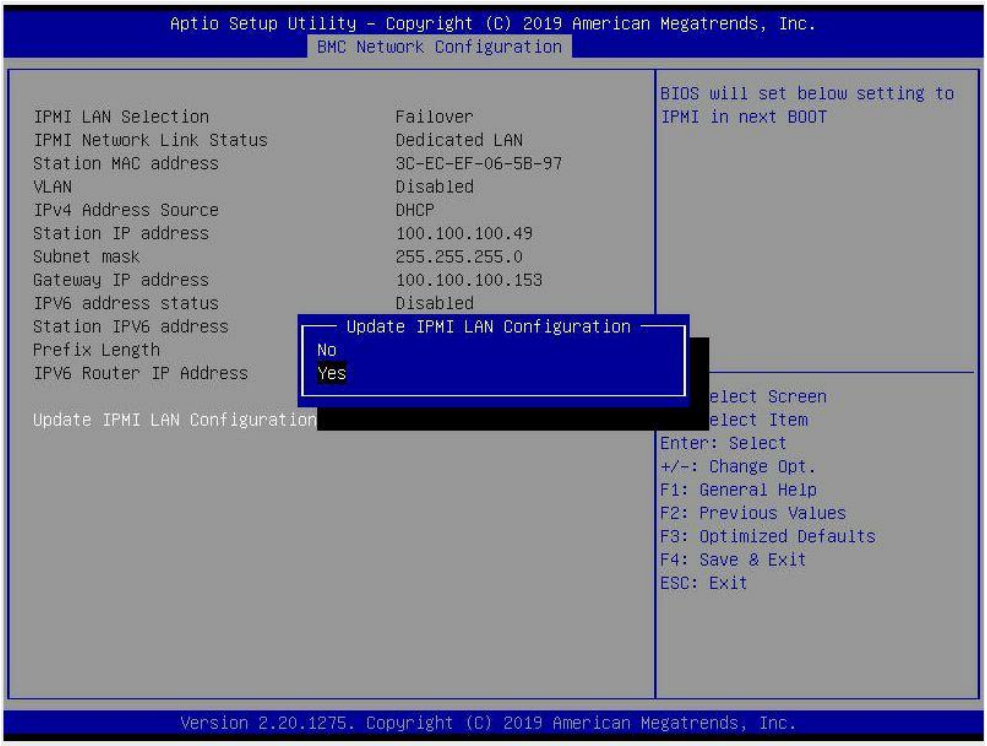

From the additional list of options, select **Configuration Address Source** and press **Enter**:

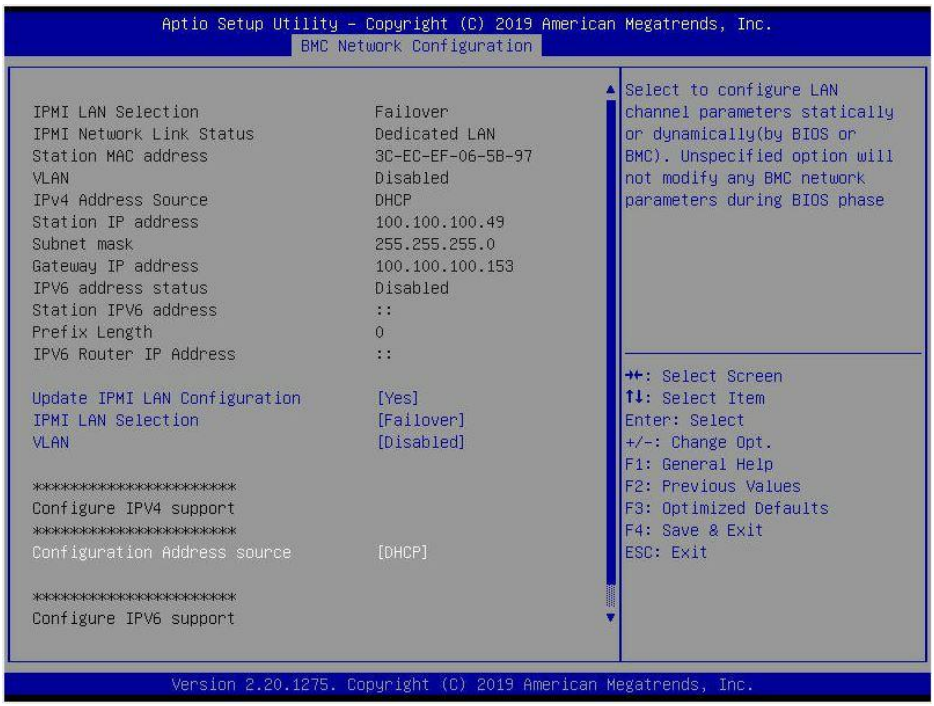

From the prompt, select **Static** and press **Enter:**

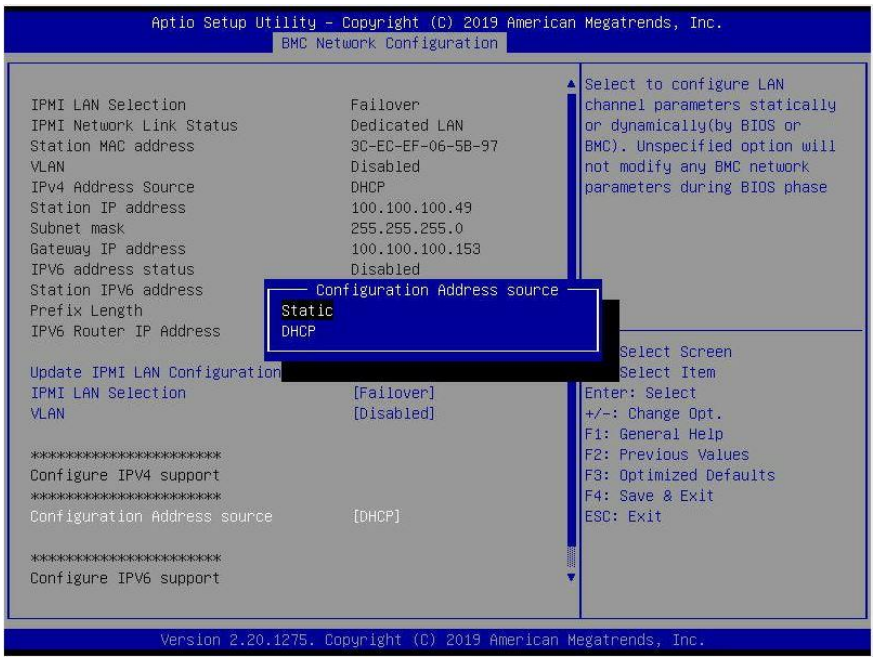

Enter the **Static IP Address, Subnet Mask** and **Gateway IP Address.**

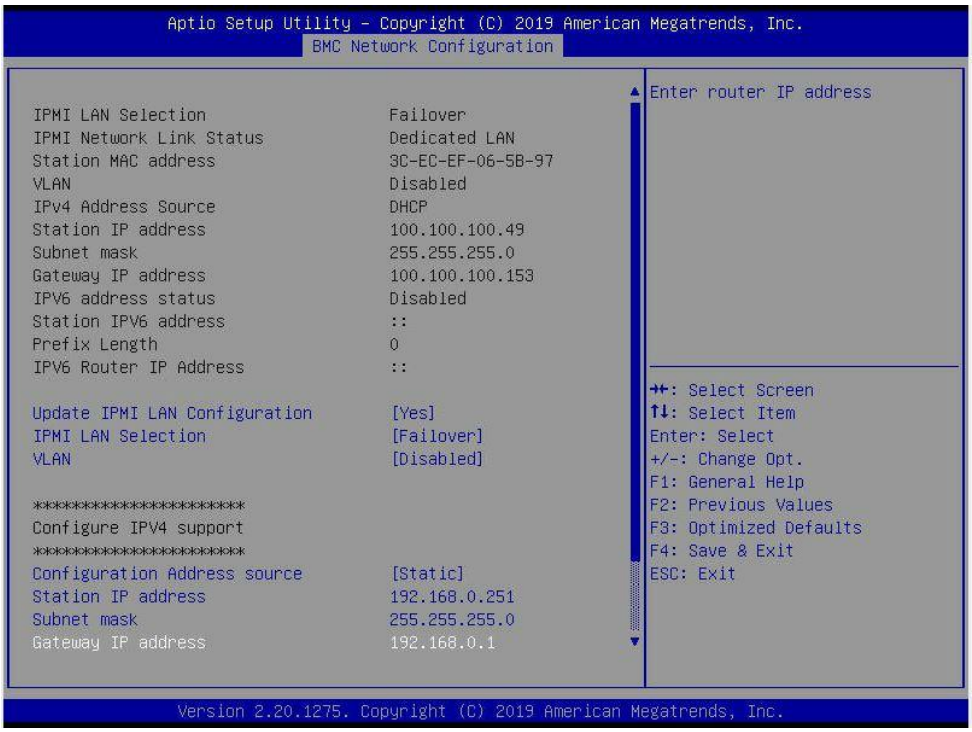

When entering addresses, please note:

1. IP Address Must be on the same subnet as USC's Management port
2. IP Subnet Mask Same as USC's Management port
3. Default Gateway Same as USC's Management port

Press the "ESC" key to exit. Navigate to the **Exit** tab and select **Save Changes and Exit**.

Note: The system will require power to be removed before IPMI IP Address will take effect.

Accessing the IPMI Interface

Start a browser and navigate to the configured IP address.

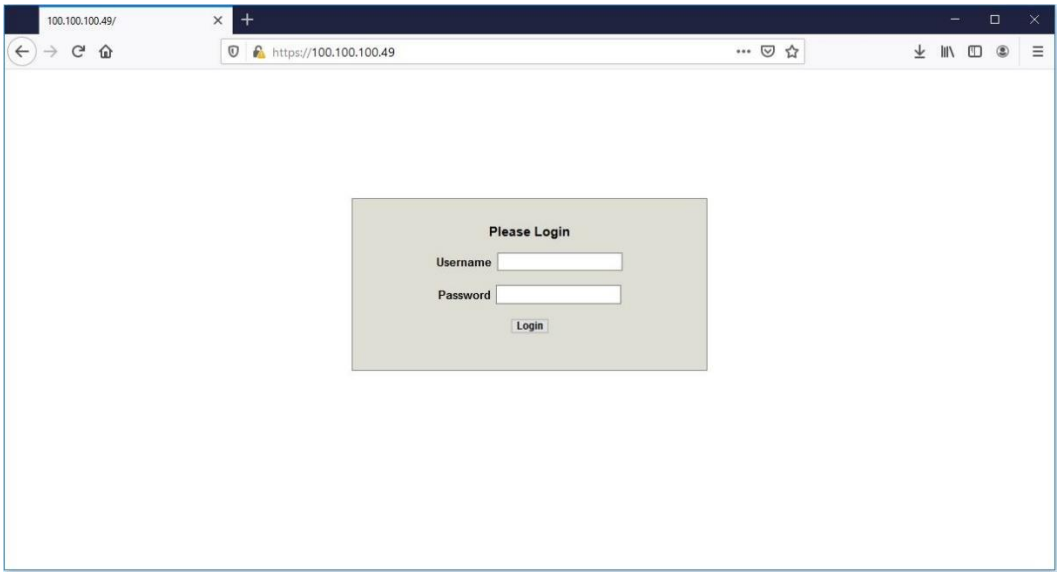

Enter the following information in the login screen:

- Username: stonefly
- Password: Stonefly1

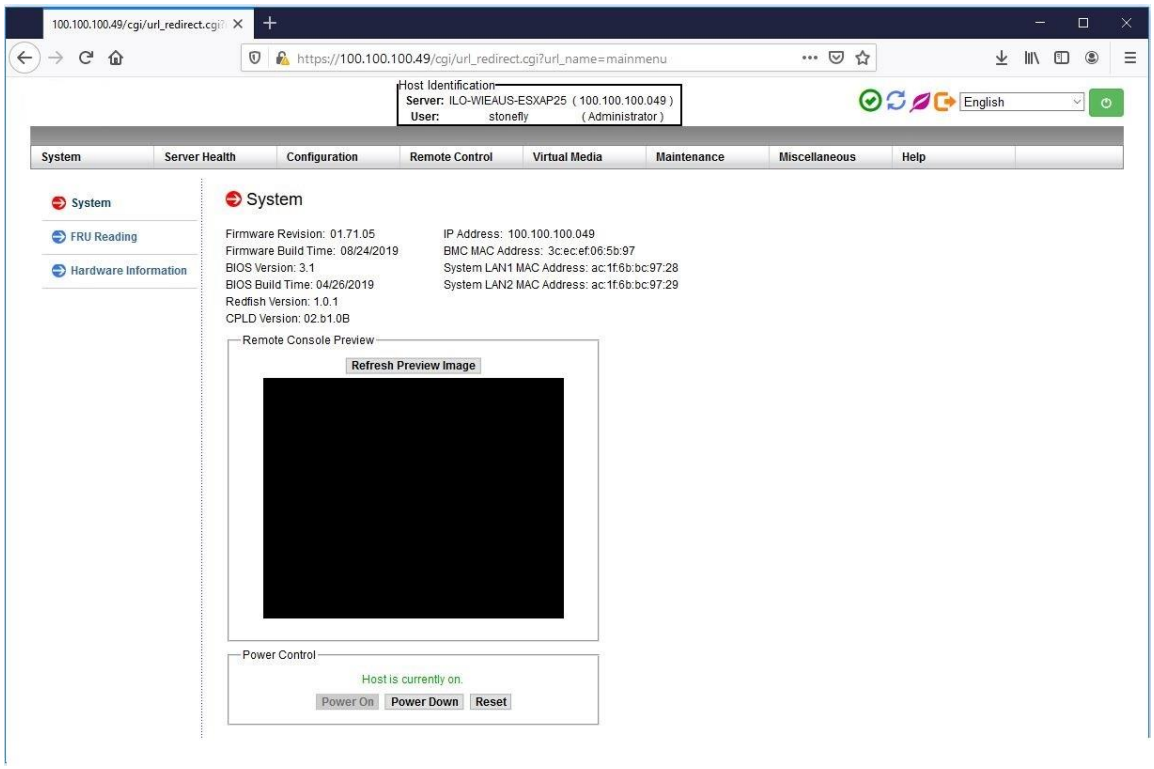

Navigate to **Remote Control** tab and select **iKVM/HTML5**:

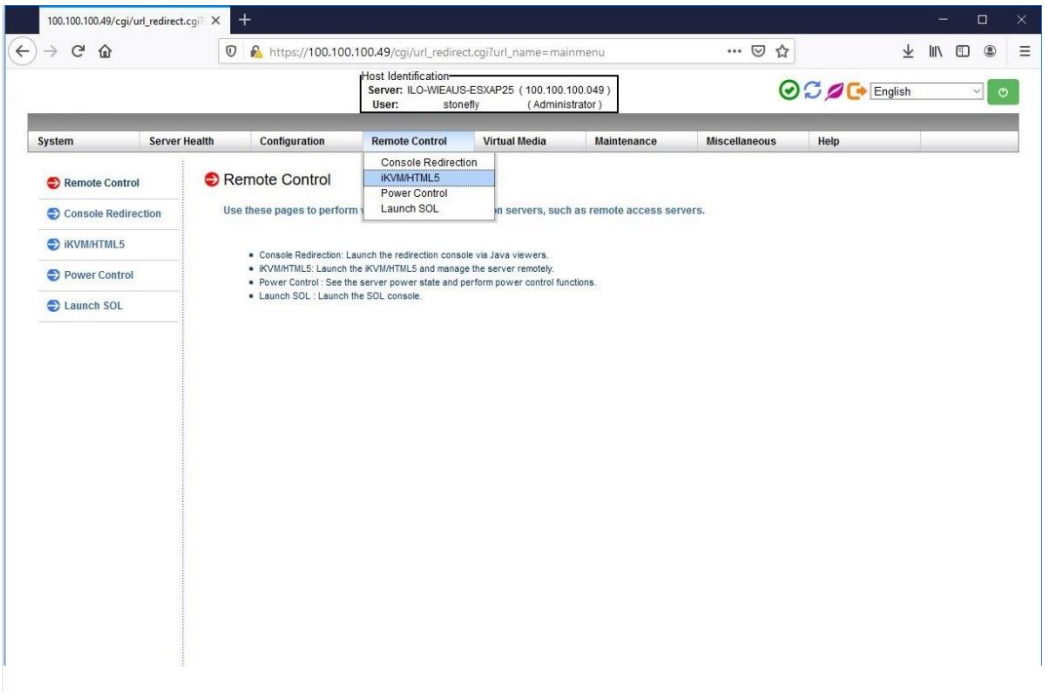

Click on **iKVM/HTML5** to launch remote console:

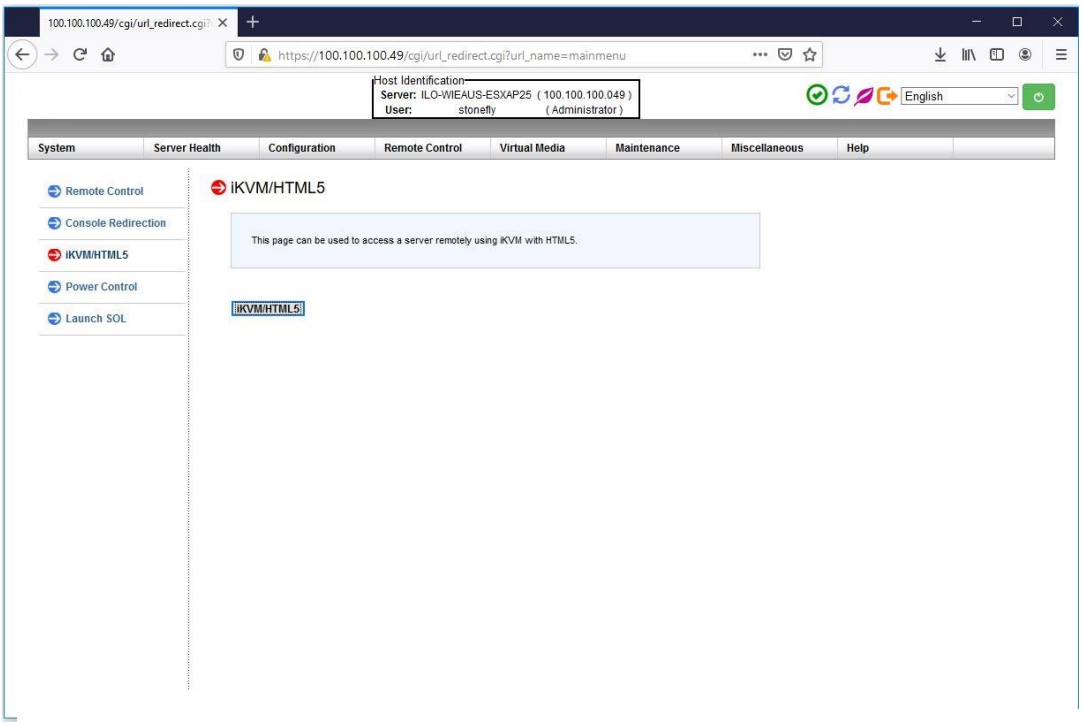

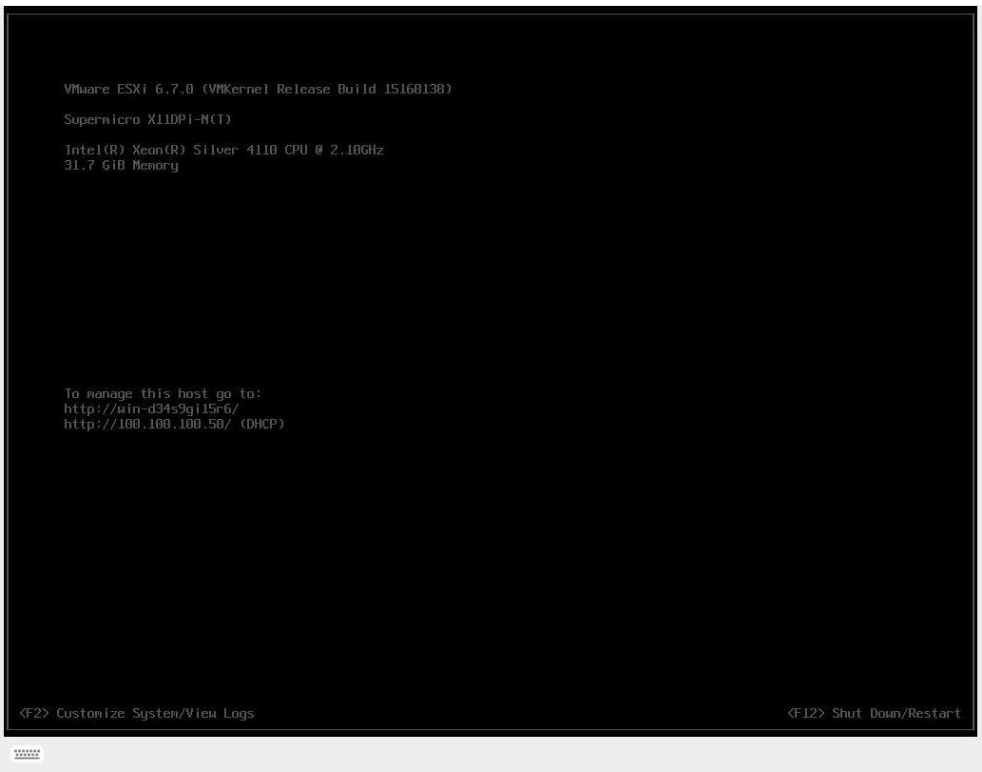

3.1.4 Configuring the Network Settings for the USC's Management Port

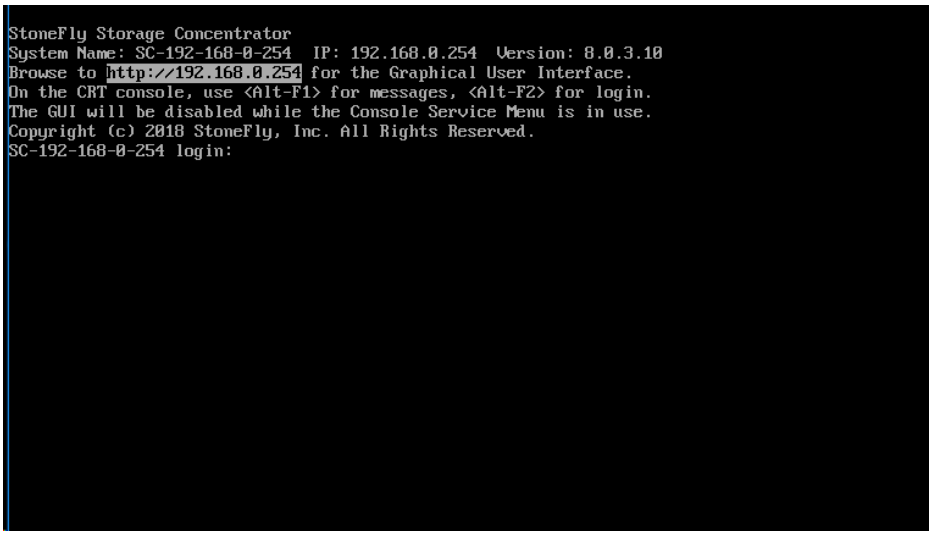

The USC's management port is preconfigured with the default IP address of 192.168.0.254. This must be changed to a valid IP address for your LAN network. Using the remote console you loaded in the previous section:

Press **Enter** to display the login prompt.

At the User ID prompt type **console** and hit **Enter**.

At the password prompt type **coni100o** and hit **Enter**. Note that the User ID and password are case sensitive.

Using the Storage Concentrator Service menu, enter **2** to select **Network**.

The current network configuration settings will appear as shown below:

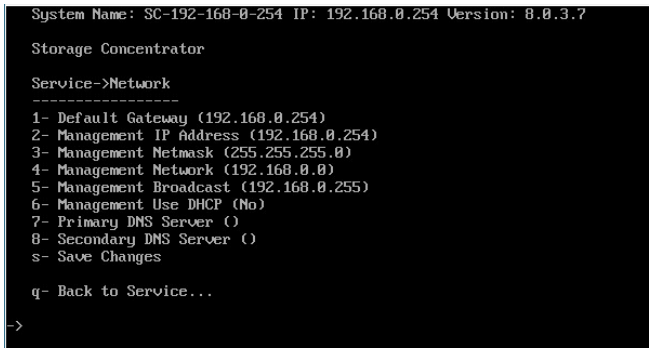

Configure all of the network settings to those appropriate for your LAN network by selecting each of the numbered fields. When finished, enter **s** option to **Save Changes**, then completely exit the CLI using the **q** option for **Logout**. The login prompt should reappear.

Browser access to the USC's management GUI is blocked while the CLI menu is active. Also note that there can be a short delay before the web GUI becomes available once the CLI is closed.

At this point, it should be possible to login to the web GUI for the StoneFly USC appliance by browsing to the management IP address that you just configured in the last step. Once logged in, you should configure the SAN data network settings.

3.1.5 Initial Configuration of the StoneFly USC Appliance

Launch a web browser, then navigate to https://<configured IP address>.

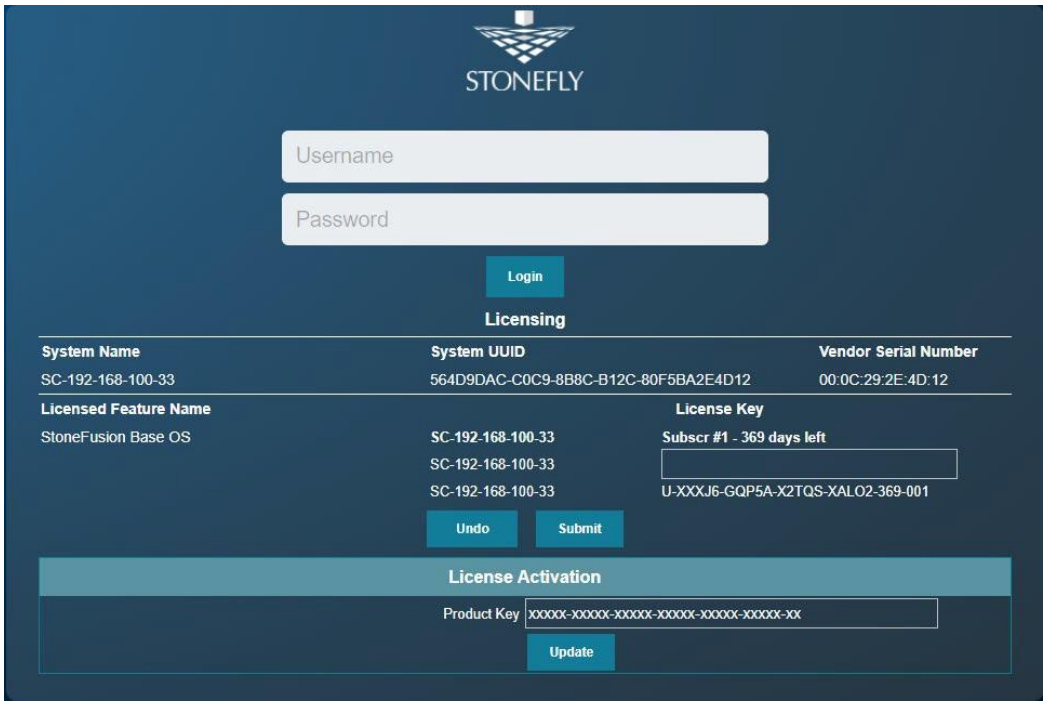

StoneFusion Login Screen

In the User ID field type: **admin**

In the Password field type: **M@n4g1ng**

Click **Submit**. The Home Page screen will appear.

Click **System.**

Click **Admin**.

Click **Auto Save**. The Auto Save screen will appear.

Select the method(s) of saving the database. A USB Flash drive must be inserted into the USB port prior to Enabling. Checkmark **Enable Auto Save to Local Device** and select **USB Flash Disk** from the dropdown menu. Click **Submit**. For **Auto Save to Remote FTP Server** create a directory for each Storage Concentrator. Fill in the IP Address, User Name, Password and directory. Select **Passive** or **Non Passive** and click **Submit**. Both methods can be used, but at least one should be configured to ensure recovery if needed.

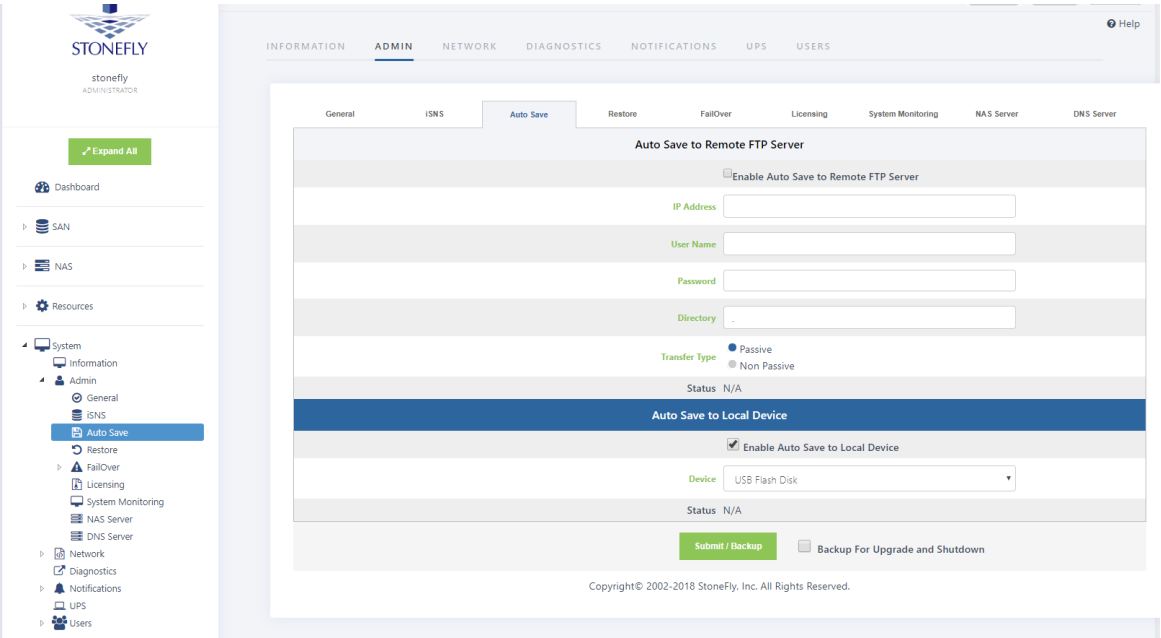

StoneFusion Auto Save Screen

Navigate to **Admin > General**. The system admin screen will appear.

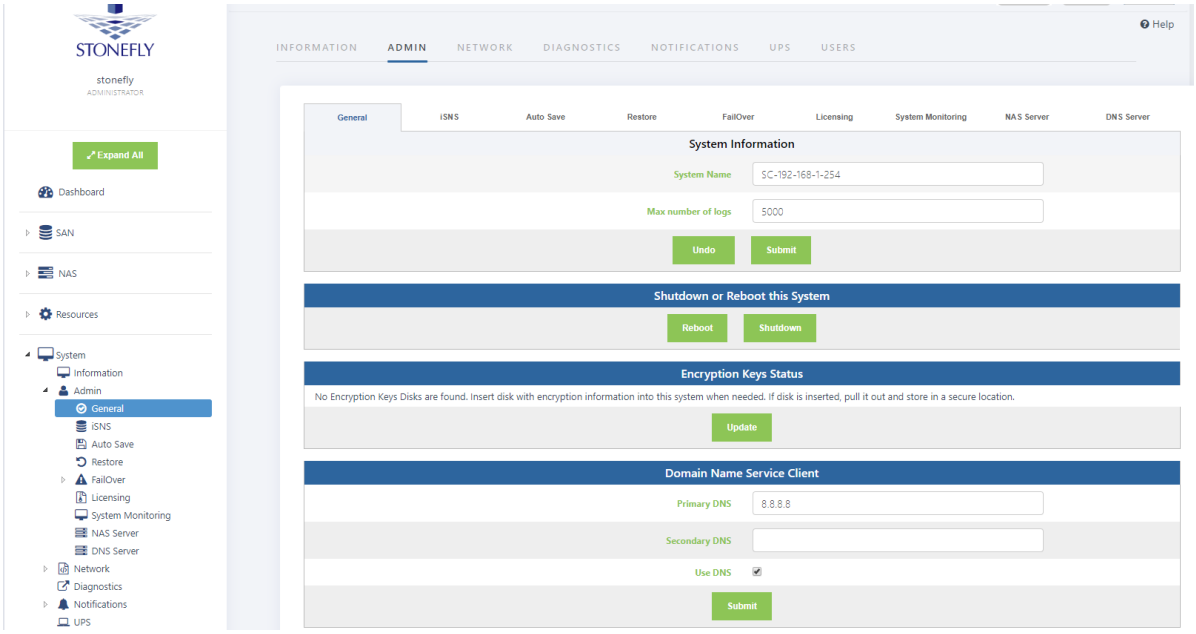

StoneFusion Admin Screen

Enter a system name for the USC appliance.

Enter the number of log records for the database in the **Max number of logs** field.

The default number of log records is 2000, which is sufficient for most installations.

Click **Submit**.

Navigate to **Network > Data Port**. The Local iSCSI Data Port Settings screen will appear with the current system (factory) settings. Most fields are blank.

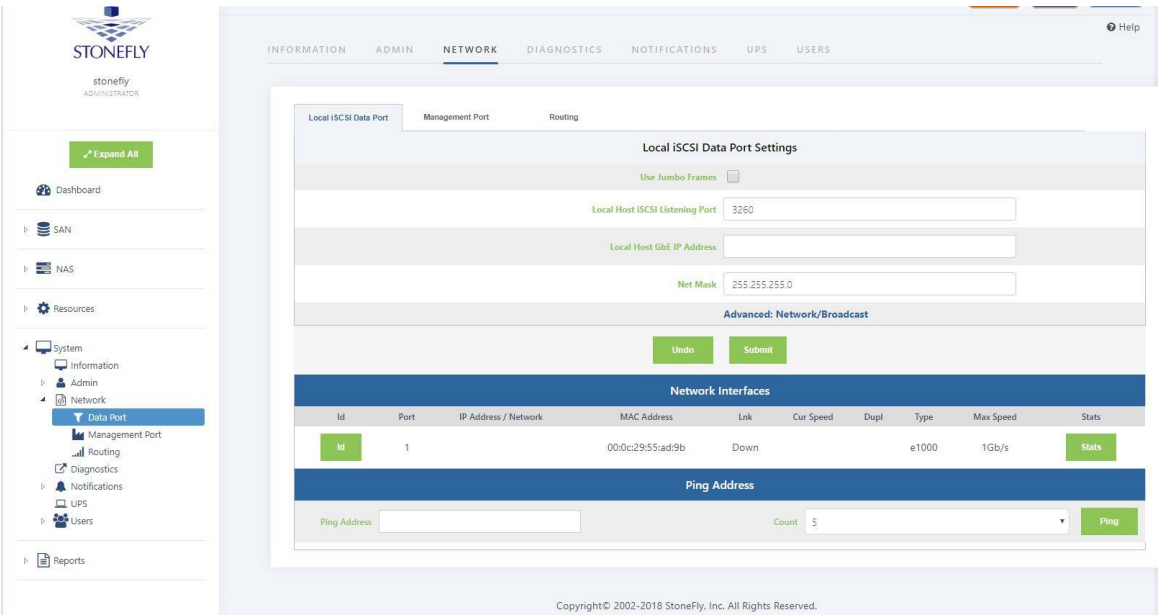

StoneFusion Local iSCSI Data Port Settings Screen

Enter the **IP Address** for the Local iSCSI Data Port. Enter

the **NetMask** setting for the Local iSCSI Data Port. Click

Submit.

Click **OK** to continue when the confirmation dialog box appears. The USC automatically configures the Network and Broadcast settings based on the IP address and Netmask settings.

Click on the **Advanced: Network/Broadcast** link to view or modify the Network and Broadcast settings. For more information, see “Chapter 2: Administrative Interface” in the Storage Concenter User’s Guide.

Review the status of all SAN Network Interfaces to select which ports will be used. It is not necessary to select all available ports. All ports selected must have cables attached to them to maintain the proper cluster configuration and operation. The **Id** button is used to flash the link light on a specific port. Select a port by clicking on the box in the **Bond** column.
Changes are not enforced until the next reboot.

At the first power up, a default configuration is presented. Changing the default settings requires a reboot of the USC appliance. Navigate to the **System** > **Admin** > **General** screen and click on **Reboot**. If no changes are desired continue to the next step to configure the Management Port.

Click on **Management Port**. The Management Port Settings screen will appear.

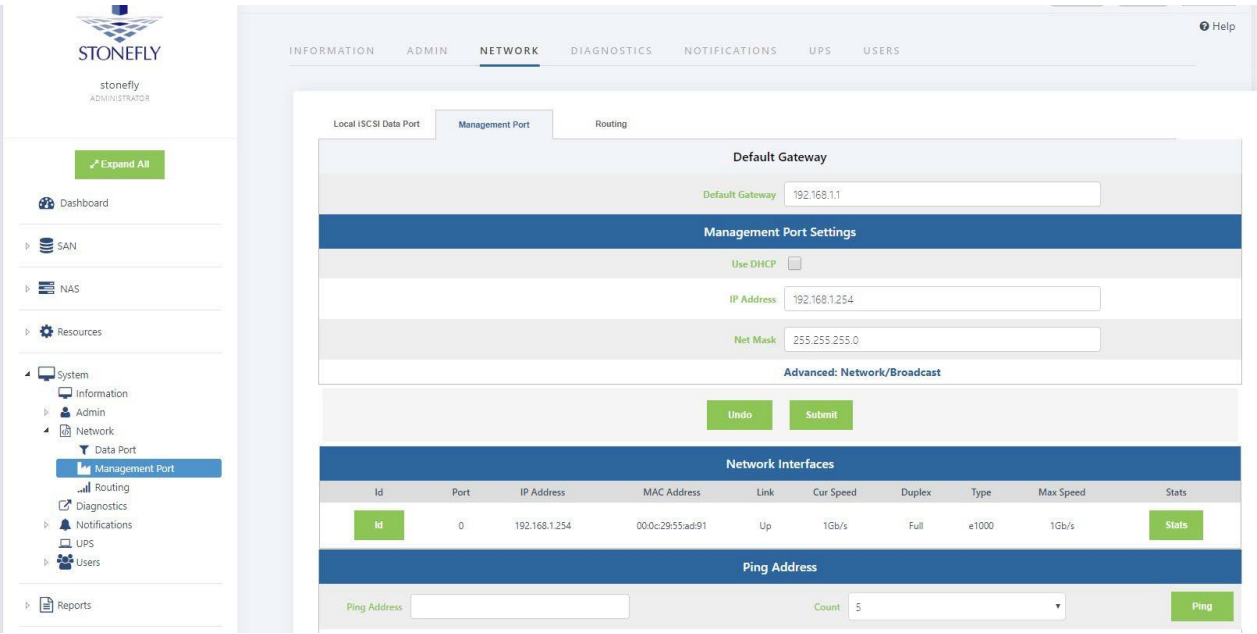

StoneFusion Management Port Settings Screen

Enter the **Default Gateway** setting.

Enter the **IP Address** for the Management port.

Enter the **NetMask** setting for the Management port. It is not necessary to select a Management Port as on the Local iSCSI Port screen. There is only one port assigned for this purpose.

The USC automatically configures the Network and Broadcast settings based on the IP address and Netmask settings. Click on the **Advanced: Network/Broadcast** link to view or modify the Network and Broadcast settings. For more information refer to "Chapter 2: Administrative Interface" in the Storage Concentrator User's Guide.

Changing the IP address of the Management port will cause your browser to lose its connection to the USC appliance. To regain access to the USC, change your browser's URL to point to the new IP address.

Click **Submit**. The following popups will appear.

Depending on the speed of your browser connection, you may not see this screen. Your changes will still take effect, however, you will need to manually set your browser's URL to point to the new IP address.

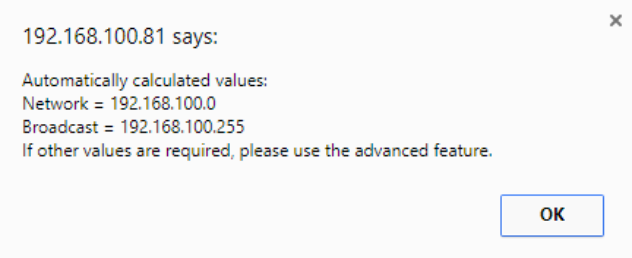

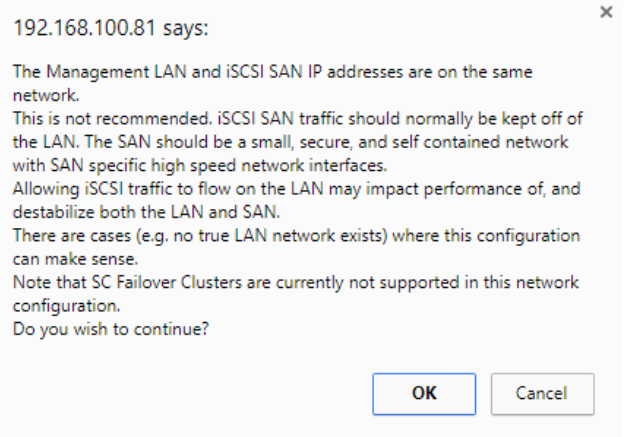

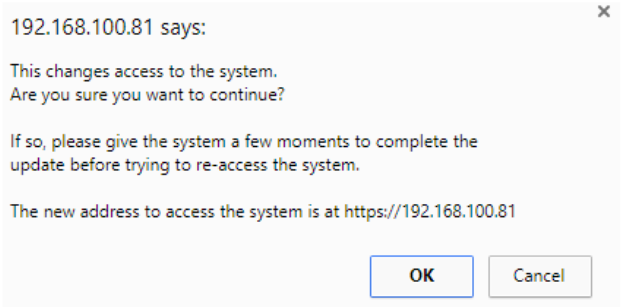

System Management Port Change Screen

1. Click on **OK** on each popup screen to continue.
2. Click on the new IP address to confirm the change to the Management Port setting.

3.1.6 Setting up Routing

To access a host on other networks, routing information to those networks must be configured in the System Management Network Routing screen. A route must be added if the host has a network setting that is different from the one listed in the Local iSCSI Data Port Settings screen.

For example, if the USC's network setting is 26.34.128.50 and the host network setting is 106.39.212.6, a route to the host must be configured.

To configure the routing information, use the following steps:

Navigate to **System > Network > Routing**. The Routing screen will appear.

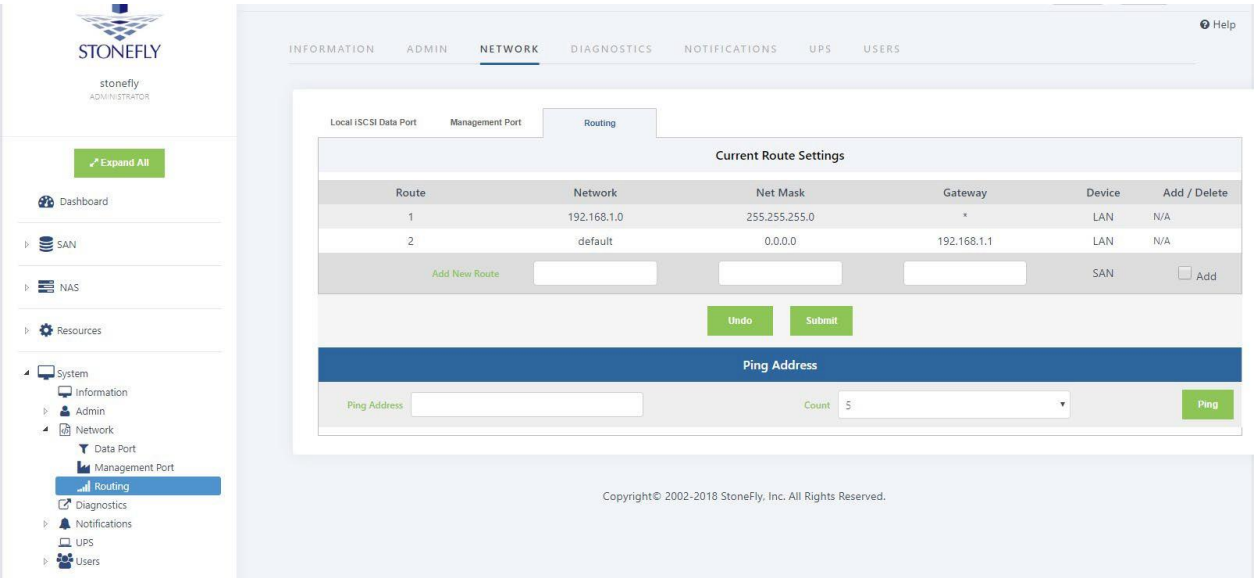

StoneFusion Management Network Routing screen

In the **Add New Route** fields, enter the **Network**, **Netmask**, and **Gateway** settings for the new route.

Click the **Add** check box and click **Submit**.

The USC must be rebooted for the new routing settings to be recognized. Navigate to **Admin > General**. The System Admin screen will appear.

Click **Reboot**.

3.1.7 Confirming Setup

It is important to confirm that the StoneFly USC appliance is configured properly to communicate on your network before completing the configuration process covered in the "Administrative Interface" chapter of the *Storage Concentrator User's Guide*.

To confirm that the USC appliance is configured properly, do the following:

Launch your web browser. In the URL address field, type the IP address you set up for the Management port during the configuration process. Be sure to include **https://** in the address.

The browser will display an alert regarding the security certificate for the site. This occurs because the IP address for the USC was changed from the factory default to one appropriate for your network.

Follow the screen prompts to accept the certificate. The number of screens will vary depending on which browser you are using. When the security certificate is accepted, the USC administrative interface login screen will appear.

If the administrative interface login screen does not appear, repeat the steps listed in "Configuring the Network Settings" on page 21.

Click on **System** and then **Network** to confirm the network settings.

Click on **Data Port** and confirm the settings.

Click on **Management Port** and confirm the settings.

Click on **Routing** and confirm the settings.

3.1.8 Steps to Complete Before Setting Up the System:

Read the Release Notes thoroughly. These can be found in your documentation CD.

Verify that your Host Initiators are at the most current revision levels. For example, if you are using the Microsoft Windows iSCSI Initiator, obtain the latest version from Microsoft.

Refer to Appendix 7: System Considerations in the *StoneFly Storage Concentrator User's Guide* and make sure that you set up your servers according to the instructions in that section before connecting or using your StoneFly Appliance.

CAUTION: Not setting up your systems according to those instructions will cause timeouts and SAN disconnections.

3.1.9 Attaching and Removing the Front Bezel

Attach the front bezel after initial installation is completed. This will help prevent damage to the drives during every day use. The cover snaps on and off easily and can be removed as needed.

To install the cover, gently press to snap the cover into place. To remove the cover, gently pull the cover towards you to remove it from the front panel.

3.1.10 Finalizing the Setup

To complete the configuration process, go to Chapter 2, "Administrative Interface" in the StoneFly *Storage Concentrator User's Guide*.

Chapter-4: Troubleshooting

Refer to the following table for helpful hints on solving some of the most common problems. If you cannot find a resolution to your problem here, contact StoneFly. Call 510.265.1616 and select support from the menu.

Problem	Possible cause	Solution
The USC administrative interface is not accessible from the computer.	The computer is not on the network.	Ensure that the computer is running a supported browser and is on the same network or subnet as the USC.
	An incorrect IP address was typed in the address line of the browser.	Try the following: • Verify and retype the IP address in the browser. • Make sure the IP address begins with https. The IP address does not begin with http.
	Incorrect network settings were entered during installation.	For the correct settings, see "Configuring the Network Settings for the USC's Management Port" on page 27.
	The network cable is not properly connected to the computer or the USC.	Try the following: • Check all network cable connections. • Make sure the network cable is not damaged.

Appendix-1: Glossary

Access Control List (ACL)

A list that controls which hosts have access to which volumes. When a host attempts to log in, the *Storage Concentrator* requests authorization and allows access based on the list.

Access Path

The route used by a computer to communicate with a storage device. The path accesses the host bus adapter, host storage interconnection controller and logical unit. Some configurations support multiple access paths to a single device.

Administrative Interface

The graphical administrative interface is accessed from a computer on the network via a web browser. The following functions are available through the interface: *Storage Concentrator* discovery, physical resource management, storage pool management, logical volume management, target management, Access Control List management (ACL), system management, session management.

Adaptive Load Balancing

A feature that allows for more than one networking path providing port FailOver protection, as well as increased bandwidth. If one port goes down, the other port automatically accepts the additional load. There is no interruption in server operation, and a network alert is generated to inform IT staff of the problem.

Application Programming Interface (API)

The interface used by an application program to request services; usually denotes interfaces between applications and the software components that comprise the operating environment (e.g., operating system, file system, volume manager, and device drivers).

Array or Array Configuration

A storage array, i.e., a disk array or RAID array.

1. Assignment of the disks and operating parameters for a disk array. Disk array configuration includes designating the member disks or extents of the array and the order in which they are to be used, as well as setting parameters such as stripe depth, RAID model, cache allowance, spare disk assignments.

2. The arrangement of disks and operating parameters that result from such an assignment.

Asynchronous I/O Operation

An I/O operation whose initiator does not await its completion before proceeding with other work. Asynchronous I/O operations enable an initiator to have multiple concurrent I/O operations in progress.

Asynchronous Mirroring

Transactions that maintain synchronization for logical volumes occur in a batch rather than real-time mode. An asynchronous mirroring is desired when mirrored logical volumes are separated by distance in order to reduce the effects of distance-induced latency. It is also desirable to use Asynchronous Mirroring or replication to reduce the bandwidthrequirements of the network connection.

Backup

1. (noun) A collection of data stored on non-volatile (usually removable) storage media for purposes of recovery in case the original copy of data is lost or becomes inaccessible. The data is also called the backup copy. To be useful for recovery, a backup must be made by copying the source data image when it is in a consistent state.

2. (verb) The act of creating a backup.

Campus Mirrors

Mirror images that are behind the Secondary *Storage Concentrator*

CHAP

CHAP (Challenge Handshake Authentication Protocol) allows you to set a Password or “Secret” for as a gatekeeper for communication between a host initiator and a volume.

Clusters

You must have at least two *Storage Concentrators* to implement FailOver on an IP Storage. Multiple *Storage Concentrators* are known as a cluster. In a clustered pair there will be one Primary and one Secondary *Storage Concentrator*. A cluster appears as a single entity to hosts on the network.

Concatenation

A logical joining of two series of data, usually represented by the symbol "|". In data communications, two or more data are often concatenated to provide a unique name or reference (e.g., S_ID | X_ID). Volume managers concatenate disk address spaces to present a single larger address space.

Configuration

1. The process of installing or removing hardware or software components required for a system or subsystem to function.
2. Assignment of the operating parameters of a system, subsystem, or device. For example, disk array configuration includes designating the member disks or extents for the array, as well as setting parameters such as stripe depth, RAID model, and cache allowance.
3. The collection of hardware and software components and operating parameters for an operating system.

Controller

The control logic in a storage subsystem that performs command transformation and routing, aggregation (RAID, mirroring, striping, or other aggregation), high-level error recovery, and performance optimization for multiple storage devices.

Controller-based Array

A disk array whose control software executes in a disk subsystem controller. The member disks of a controller-based array are necessarily part of the same disk subsystem that includes the controller.

Database Management System (DBMS)

A set of computer programs with a user and/or programming interface that supports defining the format of a database, and creating and accessing the data. A database management system removes the need for a user or program to manage low-level database storage. It also provides security and assures the integrity of the data it contains. Database management systems may be relational (table-oriented) or object-oriented.

Data Transfer Rate

The amount of data per unit time moved across an I/O bus while executing an I/O load. For any I/O load, the data transfer capacity of an I/O subsystem is limited by its data transfer rate. For disk subsystem I/O, data transfer rate is usually expressed in

MB/second (millions of bytes per second where 1 million is 10).

Detach Image

Detaching an image allows it to be mounted and used by other software applications. The most common usage is to make a backup copy of the detached image. The detached image retains the mirror volume information and can be rejoined at any time.

Disk Array

A set of disks from one or more commonly accessible disk subsystems, combined with a body of control software. The control software presents the storage capacity of the disk to hosts as one or more logical disks. When it runs on a disk controller, control software is often called firmware or microcode. Control software that runs on a host computer is usually called a volume manager.

A disk subsystem which includes control software with the capability to organize disks as disk arrays.

Disk Array Subsystem Disk Drive

A non-volatile, randomly addressable, writable data storage device. Subdivision of a disk drive, disk array, or RAID array.

Disk Partitions Distributed Lock Manager (DLM)

Software, hardware or a combination of hardware and software that prevents multiple writers from altering a data element simultaneously or in a fashion that would lead to data corruption.

Failed Over

A mode of operation for failure-tolerant systems in which a component has failed and its function has been assumed by a redundant component. A system operating in a failed-over mode that protects against single failures is not failure tolerant, since a failure of the redundant component may render the system unable to function. Some systems (e.g., clusters) are able to tolerate more than one failure; these remain failure tolerant until no redundant component is available to protect against further failures.

FailOver

The automatic substitution of a functionally equivalent system component for a failed one. FailOver automatically redirects user requests from the failed or down system to the backup system that takes over the operations of the primary system.

File Server

A computer whose primary purpose is to serve files to clients. A file server is a general-purpose computer capable of hosting additional applications or capable of only serving files. The server is also called a host.

File System

Software that imposes structure on the address space of one or more physical or logical disks so that applications may deal more conveniently with abstract-named data objects of variable size (files). File systems are often supplied as operating system components but are implemented and marketed as independent software components.

Graphical User Interface (GUI)

A user interface for intelligent devices that is characterized by pictorial displays and highly structured forms-oriented input.

Hardware-based

Functionality implemented in high-speed physical (digital) hardware components, such as logic gates, inside high-density field- programmable gate arrays (FPGAs) or application- specific integrated circuits (ASICs).

Host

A computer connected to storage; typically a server running applications or providing services that access and consume storage.

Host Bus Adapter (HBA)

An I/O adapter that connects a host I/O bus to the memory system of a computer.

Image

See Mirror Image.

Input/Output (I/O)

The process of moving data between the main memory of a computer system and an external device or interface such as a storage device, display, printer, or network connected to other computer systems. I/O is a collective term for reading or moving data into a computer system's memory, and writing, or moving data from a computer system's memory to another location.

Initiator

SCSI device (usually a host system) that requests an operation to be performed by another SCSI device, the target.

IOPS

Input/Output Per Second. It is the number of inputs and outputs or read/writes per second.

iSCSI

iSCSI is a protocol that enables the transmission of block-level SCSI data between storage devices and computers over a standard IP network. iSCSI combines Ethernet-based IP networking with the SCSI command set, the core command set used in all storage configurations.

iSCSI Client

A logical entity, typically a host, which includes at least one iSCSI Initiator.

iSCSI Initiator

A logical entity, typically within a host, that sends (iSCSI) SCSI commands to targets to be executed.

iSCSI Server

A logical entity, typically a storage controller or gateway, which includes at least one iSCSI Target.

iSCSI Target

A group of physical storage devices containing at least 1 Logical Unit Number (LUN).

iSNS

iSNS (Internet Storage Naming Service) is a discovery protocol that facilitates automated discovery, management and configuration of iSCSI devices on a TCP/IP network. In any storage network, hosts (initiators) need to know which storage resources (or targets) they can access. An Internet storage name server lets servers automatically identify and connect to authorized storage resources.

JBOD

Acronym for "Just a Bunch Of Disks." Originally used to mean a collection of disks without the coordinated control provided by control software; today the term JBOD most often refers to a cabinet of disks whether or not RAID functionality is present.

Live Volume

The volume that is being accessed by the host for normal operations. The data on this volume is complete and not accessed via pointers and/or data structures. The difference between a regular volume and a Live Volume is that the Live Volume has been Snapshot enabled.

Logical Device

A device presented to an operating environment by control software or by a volume manager. From an application standpoint, a logical device is equivalent to a physical one. In some implementations, logical devices may differ from physical ones at the operating system level (e.g., booting from a host-based disk array may not be possible).

Logical Partition Logical Unit

A logical partition is a segmentation of a logical volume.

Logical Unit Number (LUN)

The entity within a SCSI target that executes I/O commands. SCSI I/O commands are sent to a target and executed by a logical unit within that target. A SCSI physical disk typically has a single logical unit. Tape drives and array controllers may incorporate multiple logical units to which I/O commands can be addressed. Each logical unit exported by an array controller corresponds to a logical disk. (Common practice uses the terms "Logical Unit" and "LUN" interchangeably, although this is not strictly correct).

A SCSI representation of a system drive on a given channel and target ID. An encoded three-bit identifier for the logical unit.

Logical Volume

An arbitrary-sized space in a volume group that can be used as an address space for a file system or as device swap space. Logical volumes behave like disk block devices, except that, unlike physical disk partitions, they can be dynamically grown, shrunk and moved about without rebooting an operating system or entering into a maintenance or stand-alone mode.

LUN Zoning

In Fibre Channel, several devices grouped by function or by location. All devices connected to a connectivity product may include configuration of one or more zones. Devices in the same zone can see each other; devices in different zones cannot. A fabric management service used to create logical device subsets within a Storage Area Network (SAN).

Mapping

Conversion between two data addressing spaces. For example, mapping refers to the conversion between physical disk block addresses and the block addresses of the logical disks presented to operating environments by control software.

Management Information Base (MIB)

In SNMP, a collection of data elements that define the device settings the *Storage Concentrator* can control and the information it can retrieve it from a storage device.

Local Mirrors

Mirrored images that are located behind the Primary Storage Concentrator.

Metadata

Data that describes data. In disk arrays, meta-data consists of items such as array membership, member extent sizes and locations, descriptions of logical disks and partitions, and array state information. In file systems, meta-data includes file names, file properties and security information, and lists of block addresses at which each file's data is stored.

Mirroring

StoneFly Replicator™ software provides storage-independent replication that operates at the block level over an iSCSI network. Replicator supports local and remote replication and can operate synchronously or asynchronously.

StoneFly Mirroring synchronous mirroring feature supplies host-independent mirrored data storage that duplicates production data onto physically separate mirrored target images transparently to users, applications, databases, and host processors. Synchronous mirroring implies that the *Storage Concentrator* waits for a write-complete acknowledgment from all volumes before presenting a write completion status to the host.

Mirror Image

A mirror image contains an exact duplicate of all other images in a mirror volume. A mirror image is grouped with other mirror images to comprise a mirror volume (each mirror image contains a duplicate copy of the data). Mirror images can be either local mirrors or they can be campus mirrors. The size of the mirror image must be equal to the size of all other images in the mirror volume.

Mirror Volume

A Mirror Volume is composed of multiple mirror images. StoneFly Mirroring supports up to four mirror images in a mirror volume. The Mirror Volume is what the applications and hosts see as the storage device.

Mount Directory

Directory in any file system where the top directory of a descendent file system is mounted. The contents of the mount directory are the contents of the top directory in the mounted file system. If the mount directory is not empty before the file system is mounted, any existing files and directories in that directory as well as any descendent directories become invisible (and inaccessible) until the file system is unmounted.

Mount Point

Synonym for mount directory. The mount point is the location (directory) where a file system, known to the host system, is mounted. Usually defined in terms of which system the file system is mounted on and where on that system the file system is mounted.

Network Attached Storage (NAS)

A term used to refer to storage elements that connect to a network and provide file access services to computer systems. Abbreviated NAS. A NAS Storage Element consists of an engine, which implements the file services, and one or more devices, on which data is stored. NAS elements may be attached to any type of network. A class of systems that provide file services to host computers. A host system that uses network attached storage uses a file system device driver to access data using file access protocols such as NFS or CIFS. NAS systems interpret these commands and perform the internal file and device I/O operations necessary to execute them.

Network File System

In NAS, a distributed file system and its associated network protocol originally developed by Sun Microsystems Computer Corporation and commonly implemented in UNIX systems, although most other computer systems have implemented NFS clients and/or servers.
Abbreviated NFS. The IETF is responsible for the NFS standard.

Partition

1. Subdivision of the capacity of a physical or logical disk. Partitions are consecutively numbered ranges of blocks that are recognized by MS-DOS,

Windows, and most UNIX operating systems.
2. Synonym for the type of extent used to configure arrays.
3. A contiguously addressed range of logical blocks on a physical media that is identifiable by an operating system via the partition's type and subtype fields. A partition's type and subtype fields are recorded on the physical media and hence make the partition self-identifying.

Primary Storage Concentrator

The *Storage Concentrator* that manages the mirror volume.

Promote Image

Promoting a mirror image makes it a stand-alone volume. The promoted volume does not retain any mirrored volume information but contains an exact copy of the data at the time of promotion. The new stand-alone volume is accessible to the hosts and can retain security information from the mirror volume.

Partitioning

Presentation of the usable storage capacity of a disk or array to an operating environment in the form of several logical disks whose aggregate capacity approximates that of the underlying physical or logical disk. Partitioning is common in MS-DOS, Windows, and UNIX environments. Partitioning is useful with hosts that cannot support the full capacity of a large disk or array as one device. It can also be useful administratively, for example, to create hard subdivisions of a large logical disk.

Path

The access path from a host computer to a storage device.

Physical Extent

A unit of storage space on a physical device containing a specific amount of storage space. A collection of physical extents is then managed by the StoneFly Volume Manager as a logical volume, and a group of logical volumes make up a volume group. Physical extents are the smallest manageable element in a logical volume that can be managed by the StoneFly Volume Manager. The kernel and file system then use standard disk or file-system blocks when writing or reading to and from.

Physical Volume

A physical device such as a disk drive or RAID sub-system that, usually together with other devices, is configured as a volume group for subsequent division into one or more

logical volumes. Logical volumes can be of arbitrary size (in multiples of physical extent size), whereas the physical volume is defined by the physical storage boundaries of the actual recording media or recording surface area in the device.

Primary Storage Concentrator

A Primary *Storage Concentrator* is the *Storage Concentrator* in a cluster that has an active Web server for the Administrative Interface. The Primary *Storage Concentrator* configures the volumes and back-end sessions on the Secondary *Storage Concentrator(s)* within the cluster.

Port

An I/O adapter used to connect an intelligent device (node) to an I/O bus or network storage subsystems. Port is the synonym for the head end of a device I/O bus containing the arbitration logic.

Provisioning

The logical volume management services provided by the *Storage Concentrator* system create a centrally administered SAN infrastructure ideally suited for provisioning enterprise or departmental SAN, over an IP network.

Storage provisioning is the process of presenting a uniform and logical representation of physical storage resources transparent to the consumers of the storage (applications and users). Storage provisioning is not restricted by the type of storage, server platform or connection methodology. Storage provisioning dynamically maps data from the logical storage space required by applications to the actual physical storage space.

RAID

RAID is an acronym for Redundant Array of Independent Disks, a Firmware/hardware implementation of a disk array controller in which data is stored on disks in such a manner as to improve performance and avoid data loss in the presence of a disk failure.

Raw Device / Raw Partition

A disk partition not managed by a volume manager. The term raw partition is frequently encountered when discussing database systems because some database system vendors recommend volumes or files for underlying database storage, while others recommend direct storage on raw partitions.

Reattach Image

A previously detached mirror image can be reattached to the original mirror volume. Reattaching a mirror image removes it as a stand-alone image volume and initiates a rebuild operation on the reattached image.

Rebuild

The process of creating a mirror image from an existing volume. The volume is duplicated onto the mirror image at the block level in its entirety.

Relational Database Management System (RDBMS)

An RDBMS is a type of database management system that stores data in the form of related tables. Relational databases are powerful because they require few assumptions about how data is related or how it will be extracted from the database. As a result, the same database can be viewed in many different ways.

An important feature of relational systems is that a single database can be spread across several tables

Resource (Physical Device)

A disk drive, RAID (Redundant Array of Independent Disks) subsystem or other mass storage device and the data–storing media it contains. Sometimes referred to as a physical volume.

Revert Mirror to Span

Reverting a Mirror to a Span converts the mirror volume to a regular spanned volume.

Rollback

In Snapshot, rollback is a disaster recovery feature that allows users to return to the last known “good” data point in the event of corruption, viruses, or lost files. Essentially, performing a rollback returns the Live Volume to the last good known state.

Scalability

Capable of being changed in size and configuration. It typically refers to a computer, product or system’s ability to expand.

Secondary Servers

A server attached to the Secondary *Storage Concentrator* has access to campus mirror images, however, it views them as a local virtual volume. A server attached to the Secondary *Storage Concentrator* can also have its own local mirror volumes. These volumes are accessible as campus mirrors from the Primary *Storage Concentrator*.

Secondary Storage Concentrator

Another *Storage Concentrator* in a campus configuration that presents mirror images to the primary *Storage Concentrator*. Either the Primary *Storage Concentrator* or the Secondary *Storage Concentrator* or both can be single units or FailOver clusters.

SES

SES is an acronym for SCSI-3 Enclosure Services. Provides a means of SCSI access to multiple devices within an enclosure.

Simple Network Management Protocol (SNMP)

SNMP is an IETF protocol for monitoring and managing systems and devices in a network. The data being monitored and managed is defined by a MIB. The functions supported by the protocol are the request and retrieval of data, the setting or writing of data, and traps that signal the occurrence of events.

Small Computer Storage Interface (SCSI)

SCSI is a collection of ANSI standards and proposed standards that define I/O buses primarily intended for connecting storage subsystems or devices to hosts through host bus adapters. Originally intended primarily for use with small (desktop workstation) computers, SCSI has been extended to serve most computing needs, and is arguably the most widely implemented I/O bus in use today.

Snapshot

A point-in-time copy of a Live Volume. Snapshots contain an image of the volume at the exact point in time that the snapshot was taken. Snapshots can be created nearly instantaneously. The snapshot volume appears to the host as if it was a regular logical volume.

Snapshot Fragmentation/ Total Fragmentation for All Volumes

These percentages represent the amount of the index table fragmentation on the volume selected as well as the total amount of fragmentation for all Snapshot volumes. These percentages have no relationship to disk fragmentation.

Snapshot Volume

A Snapshot Volume is a virtual volume that represents a point-in-time image of a Live Volume. The Snapshot Volume data is a combination of data from the Live Volume and data from the Snapspace.

Snapspace

Snapspace is storage space configured by the Storage Concentrator used to store the changed data for maintaining snapshots. This data space is not directly readable by hosts. For fault tolerance, the Snapspace can be mirrored.

Source

A place from which data is taken. The place from which the data is acquired is called the *source*, whereas the place it is sent to or moved to is called the destination or target.

Spanning

A volume that is created which is comprised of regions or sections of several physical devices.

Secondary Storage Concentrator

A Secondary Storage Concentrator is a redundant Storage Concentrator that can be assigned volumes and accept sessions from hosts for those volumes. The Secondary Storage Concentrator in the cluster will transparently (to the hosts) become the Primary Storage Concentrator in the event of a failure in the Primary Storage Concentrator. The original Primary Storage Concentrator's storage volumes are now managed by the new Primary Storage Concentrator.

Storage Area Network (SAN)

A storage area network (SAN) is a separate and specialized network whose primary purpose is the transfer of data among storage elements and between computer systems and storage elements. A SAN consists primarily of a communication infrastructure and a management layer. The communication infrastructure provides physical connections and the management layer organizes the connections, storage elements, and computer systems so that data transfer is secure and robust.

Storage Concentrator

The *Storage Concentrator* delivers iSCSI target volumes to hosts over TCP connections in an Ethernet network. Configuring and managing these iSCSI target volumes is accomplished using a browser-based graphical user interface (GUI) resident in the *Storage Concentrator*. Storage resources are connected to the *Storage Concentrator* through a parallel SCSI connection or other connections. The system administrator uses the graphical user interface to allocate blocks of storage to create the iSCSI target volumes and authorizes their use by individual host systems.

Target

Target is synonymous with destination, a target is a file, a device, or any type of location to which data is moved or copied. The target is the provider of storage.

Target Portal

An iSCSI communications gateway between a primary Storage Concentrator and a Secondary Storage Concentrator at a campus site. Once the target portal has been created, the system will recognize storage at the campus site as an available resource for creating secondary mirror images.

Volume Group

A volume group (also referred to as SPAN) is one or more separate physical devices (disk drives or RAID sub-systems) called physical volumes that are configured to form a single large storage area that is then divided into one or more separate storage areas of arbitrary size called logical volumes. Each logical volume can then be used as a separate storage space for file system or for raw data storage by specific applications; without being constrained by physical disk boundaries. This feature is useful in various situations such as creating large file systems that exceed the size of a single disk or disk array, creating two or more separate file systems on a single disk device and/or creating a number of file systems having dissimilar geometries. A Volume group is a management abstraction term. For example, management actions and policies are applied to volume group.

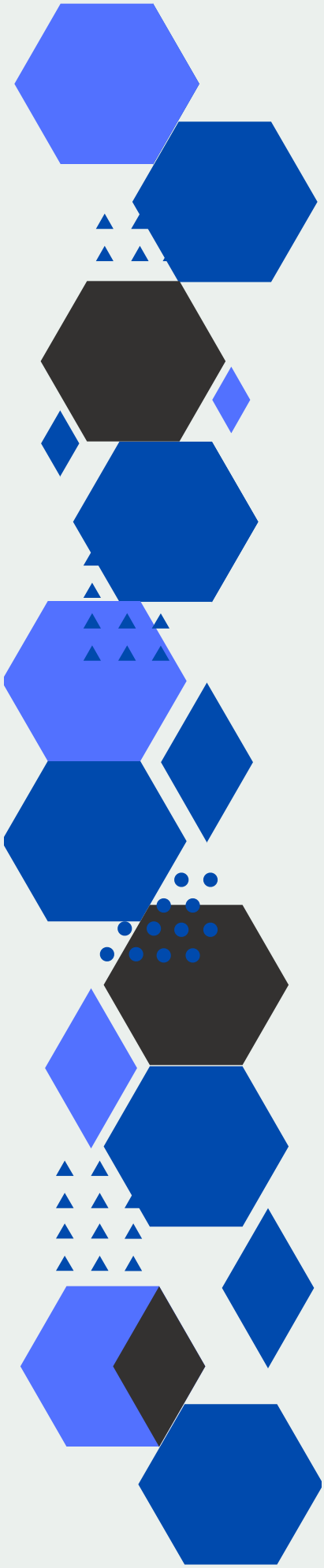

STONEFLY

www.stonefly.com
2865, 2869 and 2879
Grove Way, Castro
Valley, CA 94546 USA.
+1 (510) 265-1616
support@stonefly.com