STONEFLY

Setup Guide

Fal1200mz

IP Video Surveillance Storage

12-bay 2U rackmount

© 2020 StoneFly, Inc. | All Rights Reserved

Copyright © 2006-2020 StoneFly, Inc.

All rights are reserved. No part of this document may be photocopied or reproduced without the prior written consent of StoneFly.

The information contained in this document is subject to change without notice. StoneFly shall not be liable for errors contained herein or for consequential damages in connection with the furnishing, performance, or use of this material.

StoneFly, the StoneFly logo, Storage Concentrator, Integrated Storage Concentrator, ISC, Modular Storage Concentrator, StoneFly Backup Advantage, StoneFusion, StoneFly Replicator CDP, ValueSAN, Unified Scale Out, USO, Super Scale Out, SSO, Twin Scale Out, TSO, Unified Storage & Server, USS, Unified Deduplicated Storage, UDS, Unified Encrypted Storage, UES, OptiSAN, StoneFly Voyager, DR365, DR365 Fusion, StoneFly Mirroring, Storage Concentrator Virtual Machine, SCVM, Software-Defined Unified Storage, SDUS, and StoneFly Cloud Drive are property of StoneFly, Inc.

Other brands and their products are trademarks or registered trademarks of their respective holders.

Table of Contents

Introduction.....1
Scope of the Document 1
FAL1200mz - Hardware 2
Dimensions 2
Operating Environment 2
Front Panel – System Interface.....2
Control Panel Buttons 3
Control Panel LEDs 4
Drive Carrier LEDs.....5
Power Supply LEDs.....6
Rack Installation 7
Cabling the FAL1200mz 12
Software Operation 12
Configuring the IPMI KVM 13
Chassis Maintenance.....20
Removing Power from the System 20
Removing the Chassis Cover.....20
Removing / Replacing Hot-Swap Drives 21
Removing a System Fan.....23
Replacing a System Fan 23
Power Supply.....24
Changing the Power Supply 24
Troubleshooting 25
Appendix A.....26

Introduction

The Falcon series are high performance high capacity video recording platforms optimally designed for silent computing without compromising airflow and cooling capabilities. The Falcon appliance series is built for the enterprise-grade use-case with several tower and rackmount configurations capable of storing from a few terabytes to hundreds of terabytes of video data.

The Falcon 1200mz is a fault-tolerant data storage appliance that comes in a convenient, space-saving 3U rack mount chassis with hot-swappable drives and trays supporting storage capacities up to 224TB (when fully populated).

The FAL1200mz enables users to configure RAID 0, 1, 3, 5, 6, 10, 30, 50, and 60 with RAID cache battery backup delivering highly reliable, robust and available video storage solution.

The Falcon appliance family also supports optional cloud connect to public and private clouds for cost effective video archiving. By leveraging the built-in cloud storage gateway, users can configure the video recording platform to store live videos as they are recorded while archived footage is transferred to secure storage in Azure, AWS, or any other S3 compatible cloud or in StoneFly private cloud.

Scope of the Document

The purpose of this document is to guide the user through the setup process and to share the technical specifications and hardware information of the FAL1200mz video recording platform. The technical specifications, hardware build, hardware components, and troubleshooting of FAL1200mz are described in this document

© 2020 StoneFly, Inc. | All rights reserved.

FAL1200mz - Hardware

Dimensions

Height	**3.5” (89 mm)**
Width	17.2” (437 mm)
Depth	25.5” (647 mm)
Gross Weight	72 lbs (32.66 kg)

Operating Environment

Operating Temperature Range	**5°C - 35°C (41°F - 95°F)**
Non-Operating Temperature Range	-40°C - 70°C (-40°F - 158°F)
Operating Relative Humidity Range	8% - 90% (non-condensing)
Non-Operating Relative Humidity Range	5% - 95% (non-condensing)

Front Panel – System Interface

Buttons	• Power On/Off button • System Reset Button
LEDs	• 2 Network Activity LEDs • Fan Fail/System Over Heat LED • HDD activity LED • Power Status LED • Unit Identification (UID) LED

© 2020 StoneFly, Inc. | All rights reserved.

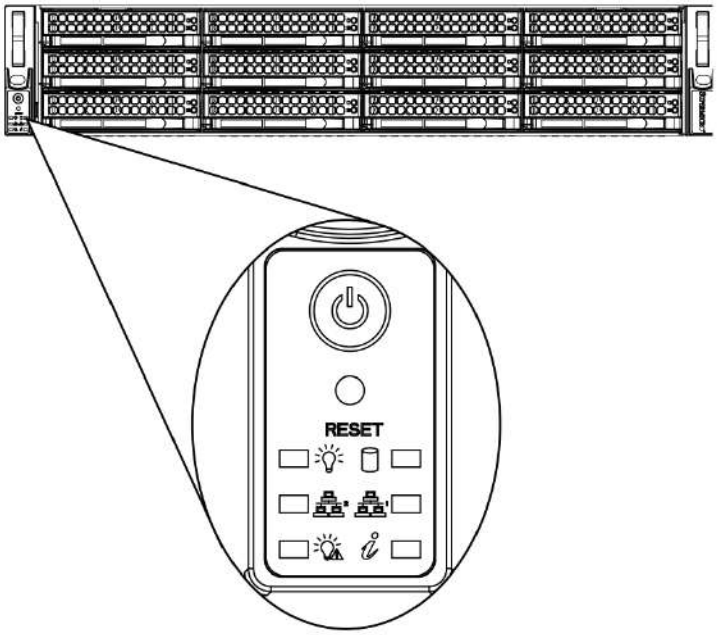

FAL1200mz - Front Control Panel

Control Panel Buttons

Power

The main power switch is used to apply or remove power from the power supply to the server system. Turning off system power with this button removes the main power but keeps standby power supplied to the system. Therefore, you must unplug system before servicing.

Reset

The reset button is used to reboot the system.

© 2020 StoneFly, Inc. | All rights reserved.

Control Panel LEDs

There are six LEDs that provide status information about the system.

Power

Indicates power is being supplied to the system power supply units. This LED should normally be illuminated when the system is operating.

HDD

Indicates activity on the hard drive when flashing.

NIC2

Indicates network activity on GLAN2 when flashing.

NIC1

Indicates network activity on GLAN1 when flashing.

Power Fail

Indicates a power supply has failed.

© 2020 StoneFly, Inc. | All rights reserved.

Information LED

Alerts operator of several states, as noted in the table below.

Information LED	
Status	**Description**
Continuously on and red	An overheat condition has occurred. (This may be caused by cable congestion.)
Blinking red (1 Hz)	Fan failure, check for an inoperative fan.
Blinking red (0.25 Hz)	Power failure, check for a non-operational power supply.
Solid blue	Local UID has been activated. Use this function to locate the server in a rack mount environment.
Blinking blue	Remote UID is on. Use this function to identify the server from a remote location.

Drive Carrier LEDs

The chassis includes externally accessible SAS/SATA drives. Each drive carrier displays two status LEDs on the front of the carrier.

- **Green:** When illuminated, this LED indicates drive activity. It blinks on and off when that particular drive is being accessed. This function is controlled by the backplane.
- **Red:** When illuminated, this LED indicates a drive failure. You should be notified by your system management software.

© 2020 StoneFly, Inc. | All rights reserved.

Power Supply LEDs

On the rear of the power supply module, an LED displays the status.

- **Solid Green:** When illuminated, indicates that the power supply is on.
- **Solid Amber:** When illuminated, indicates the power supply is plugged in and turned off, or the system is off but in an abnormal state.
- **Blinking Amber:** When blinking, this system power supply temperature has reached 63C. The system will automatically power-down when the power supply temperature reaches 70C and restart when the power supply temperature goes below 60C.

© 2020 StoneFly, Inc. | All rights reserved.

Rack Installation

This section provides information on installing the StoneFly FAL1200mz appliance into a rack or cabinet with the rails provided. There are a variety of rack/cabinet units on the market, which may mean that the assembly procedure will differ slightly. You should also refer to the installation instructions that came with the rack unit you are using.

NOTE: This rail will fit a rack/cabinet between 26" and 33.5" deep.

Identifying the Sections of the Rack Rails

The StoneFly FAL1200mz chassis package includes two rack rail assemblies in the rack mounting kit. Each assembly consists of three sections: an inner rail that secures directly to the chassis, an outer rail that secures to the rack, and a middle rail which extends from the outer rail. These assemblies are specifically designed for the left and right side of the chassis.

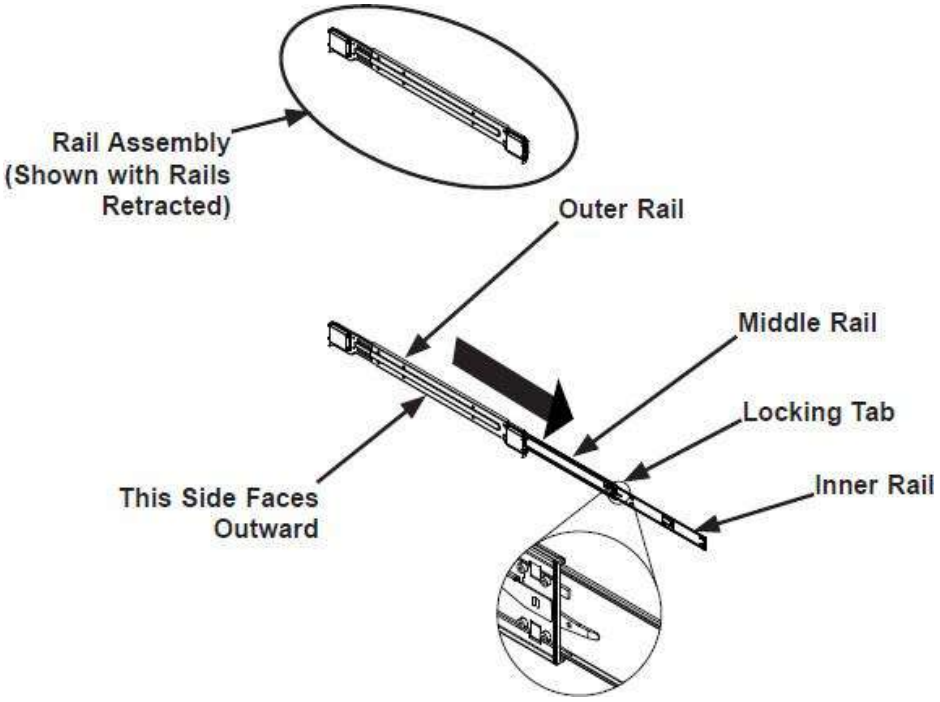

Identifying the Outer Rail, Middle Rail and Inner Rail

(Left Rail Assembly Shown)

© 2020 StoneFly, Inc. | All rights reserved.

Releasing the Inner Rail

Each inner rail has a locking latch. This latch prevents the server from coming completely out of the rack when the chassis is pulled out for servicing. To mount the rail onto the chassis, first release the inner rail from the outer rails.

Releasing the Inner Rail from the Outer Rails:

1. Pull the inner rail out of the outer rail until it is fully extended as illustrated below.
2. Press the locking tab down to release the inner rail.
3. Pull the inner rail all the way out.
4. Repeat for the other outer rail.

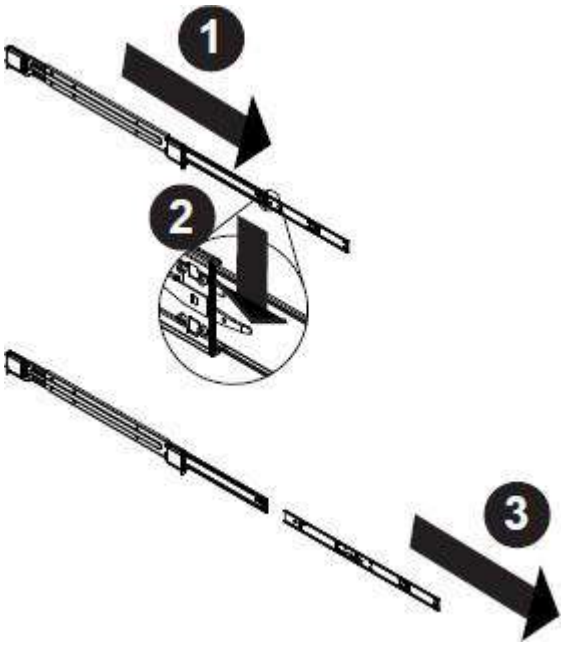

Extending and Releasing the Inner Rail

© 2020 StoneFly, Inc. | All rights reserved.

Installing the Inner Rails on the Chassis

Installing the Inner Rails

1. Identify the left and right inner rails. They are labeled.
2. Place the inner rail firmly against the side of the chassis, aligning the hooks on the side of the chassis with the holes in the inner rail.
3. Slide the inner rail forward toward the front of the chassis until the quick release bracket snaps into place, securing the rail to the chassis.
4. Optionally, you can further secure the inner rail to the chassis with a screw.
5. Repeat for the other inner rail.

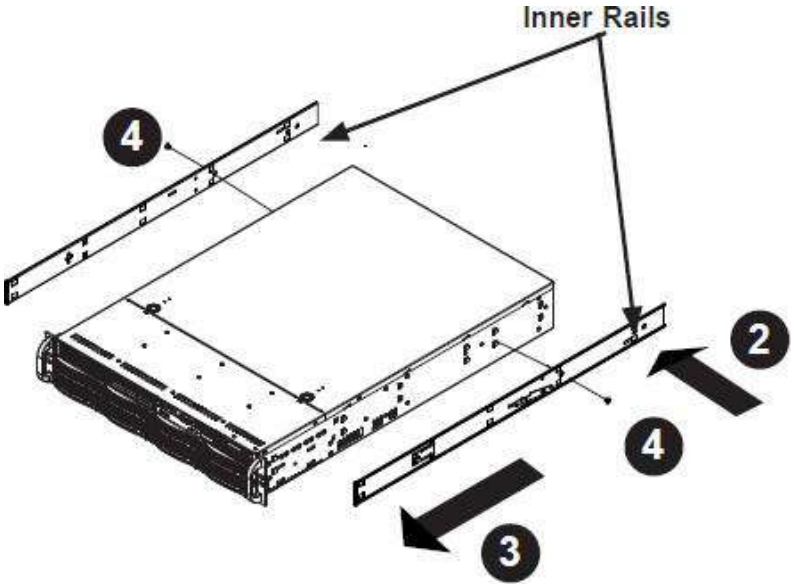

Installing the Inner Rails

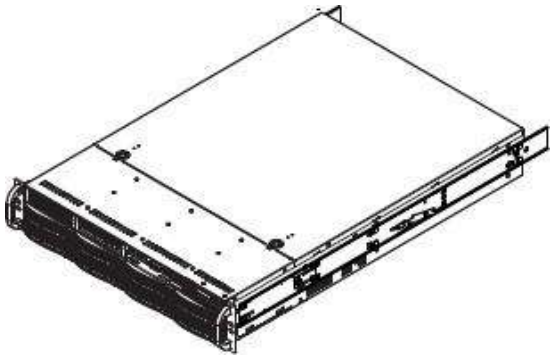

Inner Rails Installed on the Chassis

© 2020 StoneFly, Inc. | All rights reserved.

Installing the Outer Rails onto the Rack

Installing the Outer Rails

1. Press upward on the locking tab at the rear end of the middle rail.
2. Push the middle rail back into the outer rail.
3. Hang the hooks on the front of the outer rail onto the square holes on the front of the rack. If desired, use screws to secure the outer rails to the rack.
4. Pull out the rear of the outer rail, adjusting the length until it just fits within the posts of the rack.
5. Hang the hooks of the rear section of the outer rail onto the square holes on the rear of the rack. Take care that the proper holes are used so the rails are level. If desired, use screws to secure the rear of the outer rail to the rear of the rack.

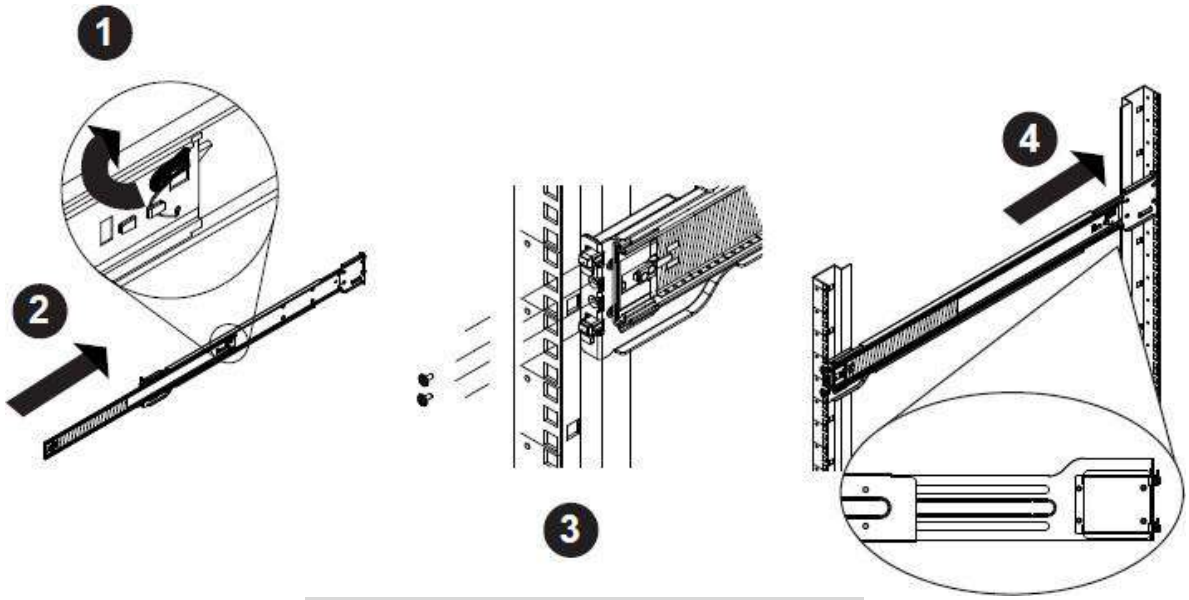

Extending and Mounting the Outer Rails

The rack stabilizing mechanism must be in place, or the rack must be bolted to the floor before you slide the unit out for servicing.

Failure to stabilize the rack can cause the rack to tip over. Do not use a two post “telco” type rack.

© 2020 StoneFly, Inc. | All rights reserved.

Sliding the Chassis onto the Rack Rails

Warning: Mounting the system into the rack requires at least two people to support the chassis during installation. Please follow the safety recommendations printed on the rails.

Installing the Chassis into a Rack

1. Extend the outer rails as illustrated above.
2. Align the inner rails of the chassis with the outer rails on the rack.
3. Slide the inner rails into the outer rails, keeping the pressure even on both sides. When the chassis has been pushed completely into the rack, it should click into the locked position.
4. Optional screws may be used to hold the front of the chassis to the rack.

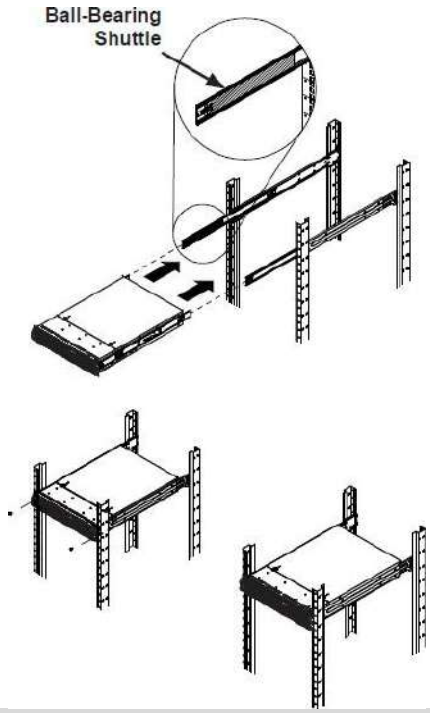

Installing the Chassis into a Rack

Note: The figure above is for illustrative purposes only. Always install servers to the bottom of the rack first.

Caution: Do not pick up the server with the front handles. They are designed to pull the system from a rack only.

© 2020 StoneFly, Inc. | All rights reserved.

Cabling the FAL1200mz

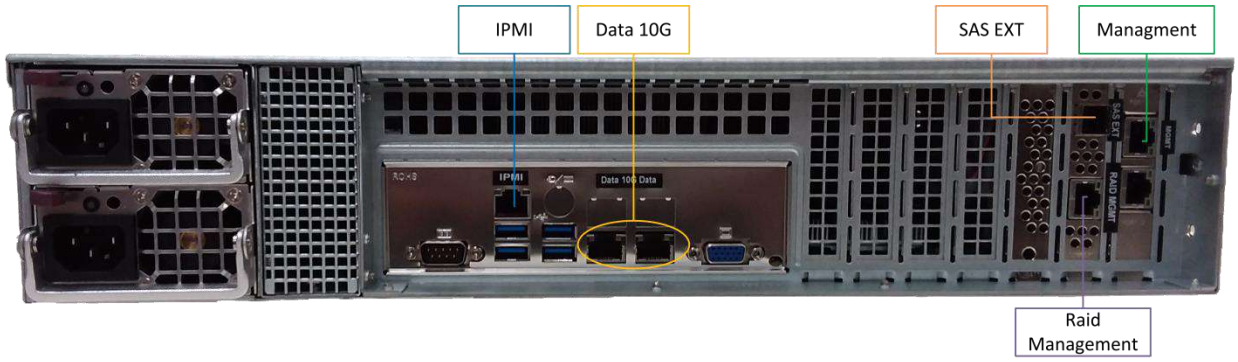

- Connect a video display to the blue 15-pin VGA port.
- Connect a keyboard to a USB port.
- Connect a mouse to a USB port.
- Connect power to the power supplies via the provided power cords, preferably from a UPS (Uninterruptible Power Supply) with battery backup rated to handle the appliance.
- Connect 1 network cable to the IPMI port and 4 network cables (preferably CAT-6 or CAT-5e) to the NIC ports (see above figure).

Note: Do not plug in the RAID management port.

Note: For camera/system connection examples, refer to Appendix A.

Software Operation

- Power On the system and login using the following credentials:
  - **Username:** administrator
  - **Password:** Falcon!
- Fill out the end user registration form that will pop up on startup. If you wish to register at a later date, you could use the link on the desktop.

Note: Support will not be provided until the form is completed and submitted.

- You will also find the following links on the system desktop:
  - RAID Management GUI (the login information is **Username:** administrator and **Password:** Falcon!)
  - Product Registration Form (for faster support and assistance we highly recommend registering your product)
  - Any requested [pre-installed] video management software shortcut.

© 2020 StoneFly, Inc. | All rights reserved.

- The factory preset system information for the Falcon series video storage system is as follows:

Username: administrator

Password: Falcon!

IP Address: DHCP

Workgroup: Servgroup

Configuring the IPMI KVM

The Intelligent Platform Management Interface (IPMI) KVM configuration allows for **Remote Management** and **Power Control** of the StoneFly DR365V system. This configuration is optional to perform, but recommended.

To configure the IPMI module, connect a keyboard and monitor to the system. Power on the system and press the **Del** key to enter the BIOS setup.

Navigate to **IPMI** tab and go to **BMC Network Configurations**:

© 2020 StoneFly, Inc. | All rights reserved.

In the **BMC Network Configuration** tab, select **Update IPMI LAN Configuration** and press **Enter**:

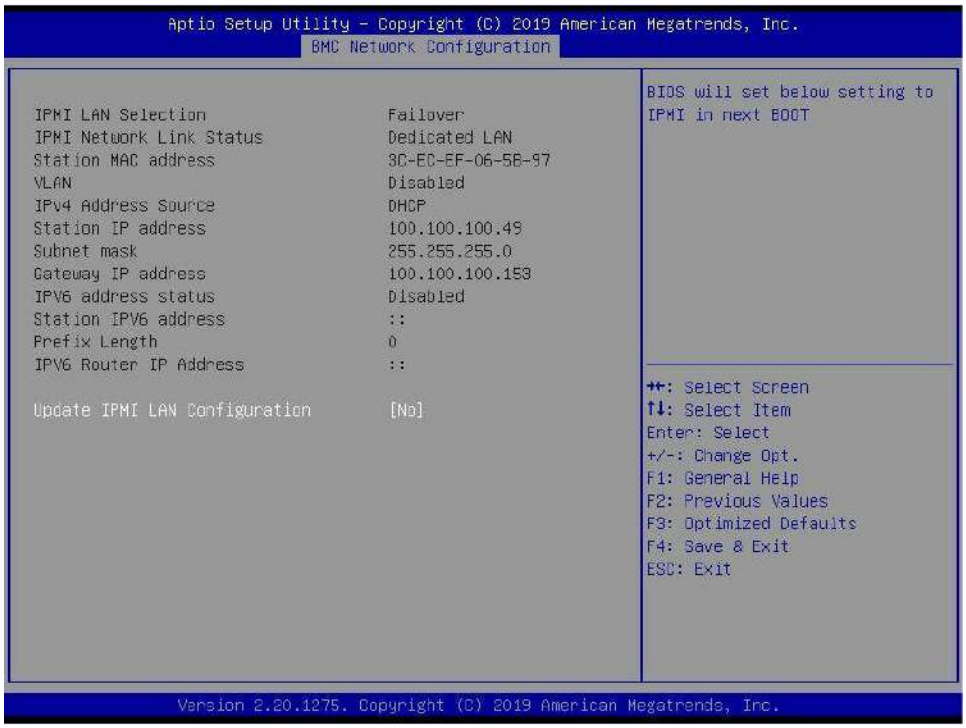

When prompted, select **Yes** and press **Enter**.

© 2020 StoneFly, Inc. | All rights reserved.

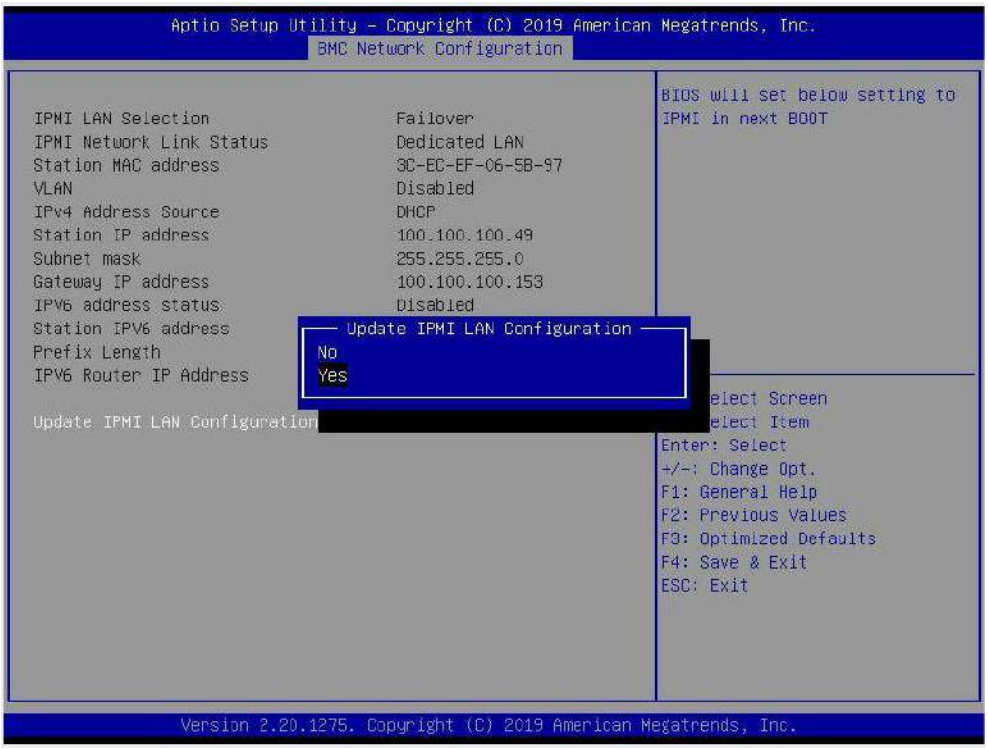

From the additional list of options, select **Configuration Address Source** and press **Enter**:

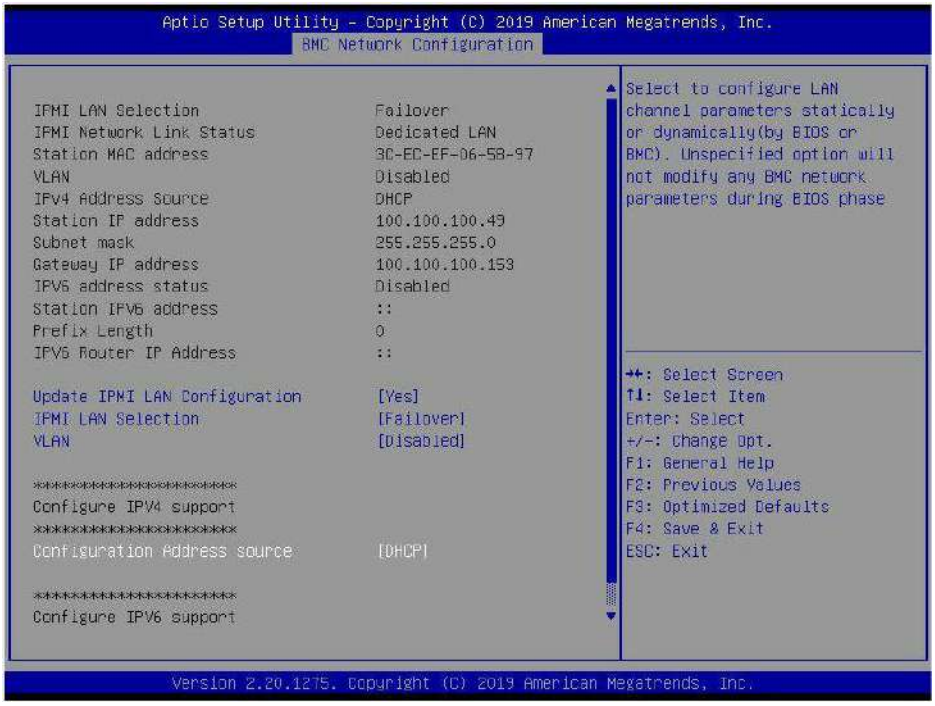

© 2020 StoneFly, Inc. | All rights reserved.

From the prompt, select **Static** and press **Enter:**

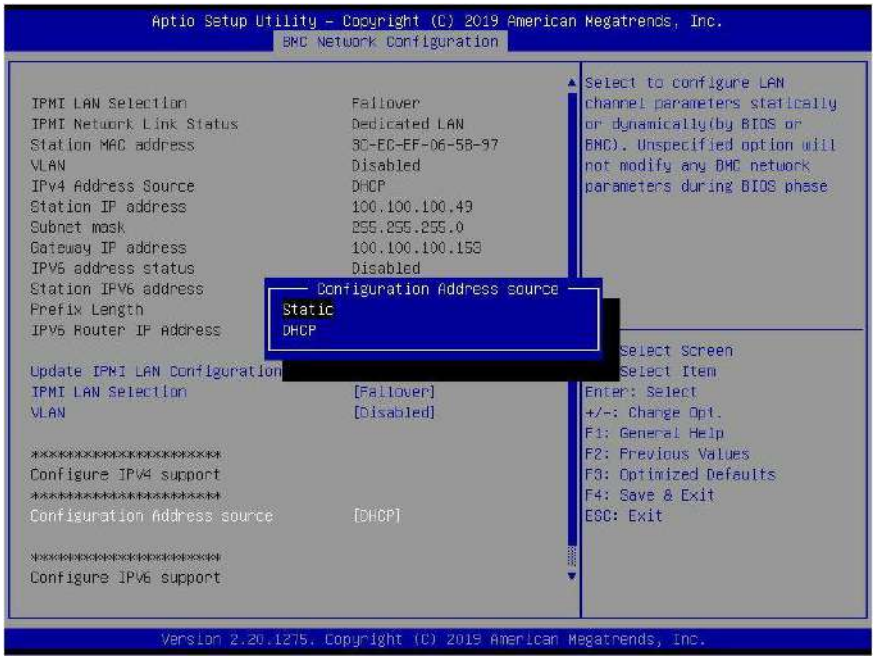

Enter the **Static IP Address, Subnet Mask** and **Gateway IP Address.**

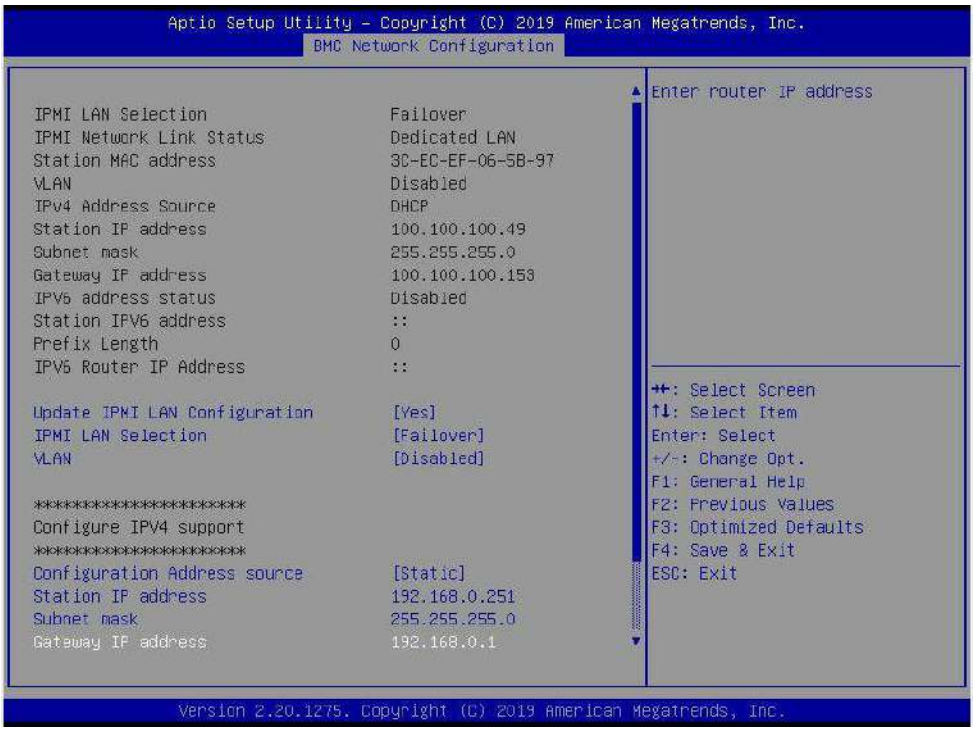

© 2020 StoneFly, Inc. | All rights reserved.

When entering addresses, please note:

1. IP Address: Must be on the same subnet as FAL1200mz's Management port
2. IP Subnet Mask: Same as FAL1200mz's Management port
3. Default Gateway: Same as FAL1200mz's Management port

Press the "ESC" key to exit. Navigate to the **Exit** tab and select **Save Changes and Exit**.

Note: The system will require power to be removed before IPMI IP Address will take effect.

Accessing the IPMI Interface

Start a browser and navigate to the configured IP address.

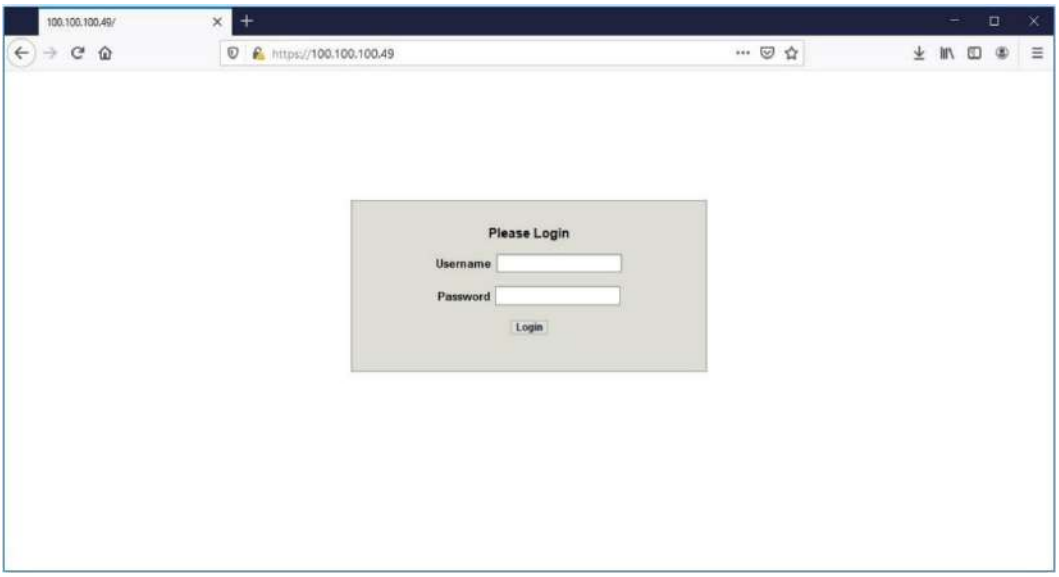

Enter the following information in the login screen:

- Username: falcon
- Password: Falcon1!

© 2020 StoneFly, Inc. | All rights reserved.

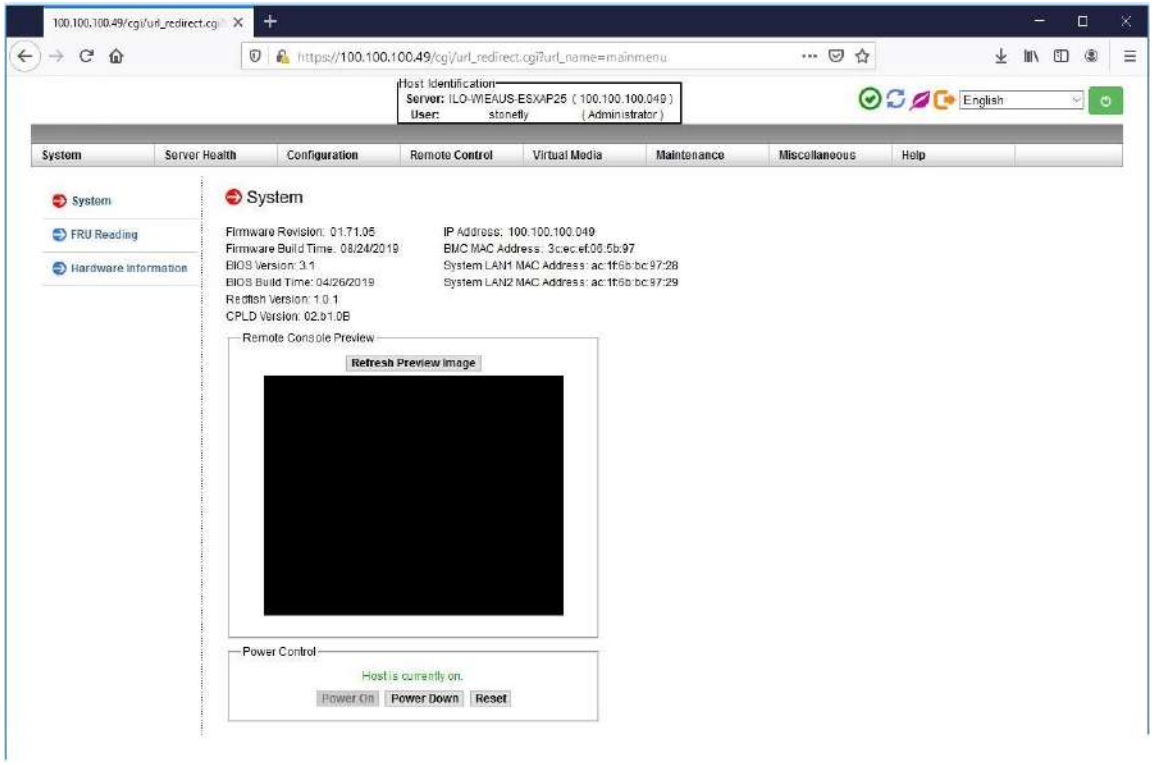

Navigate to **Remote Control** tab and select **iKVM/HTML5**:

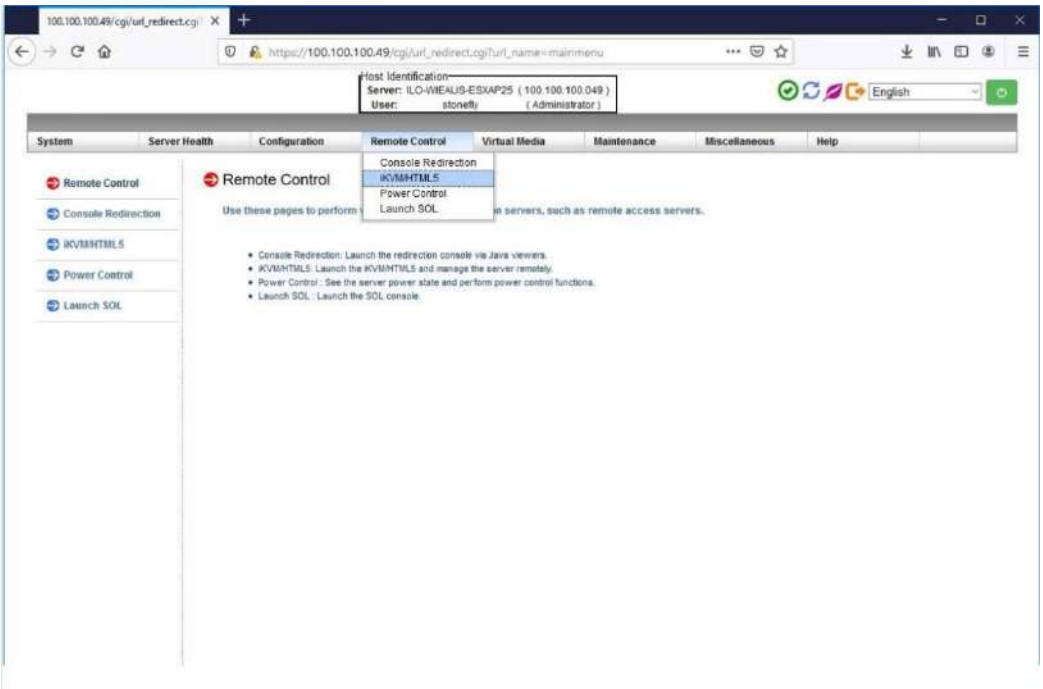

Click on **iKVM/HTML5** to launch remote console:

© 2020 StoneFly, Inc. | All rights reserved.

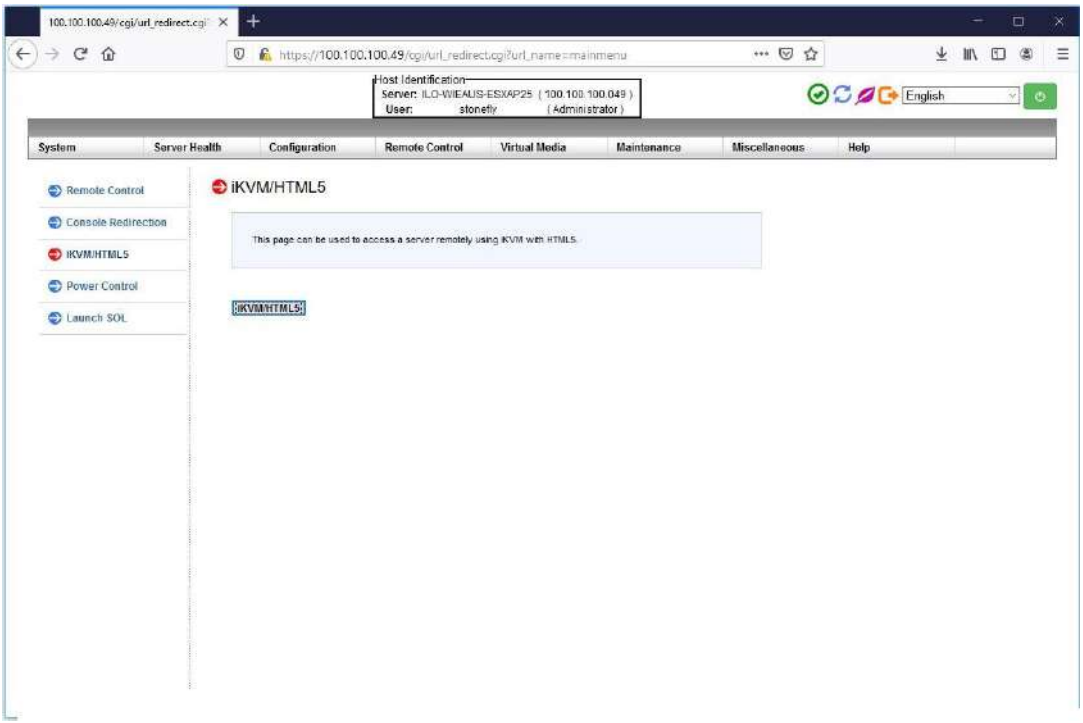

Select **Launch Console** to open the system console.

The system user console screen will appear.

© 2020 StoneFly, Inc. | All rights reserved.

Chassis Maintenance

This section covers the steps to perform maintenance on the chassis. The only tool required is a Phillips screw driver.

Review the warnings and precautions listed in the manual before setting up or servicing this chassis.

Removing Power from the System

Before performing some setup or maintenance tasks, use the following procedure to ensure that power has been removed from the system.

- Use the operating system to power down the node, following the on-screen prompts.
- After the system has completely shut-down, carefully grasp the head of the power cord and gently pull it out of the back of the power supply.
- Disconnect the cord from the power strip or wall outlet.

Removing the Chassis Cover

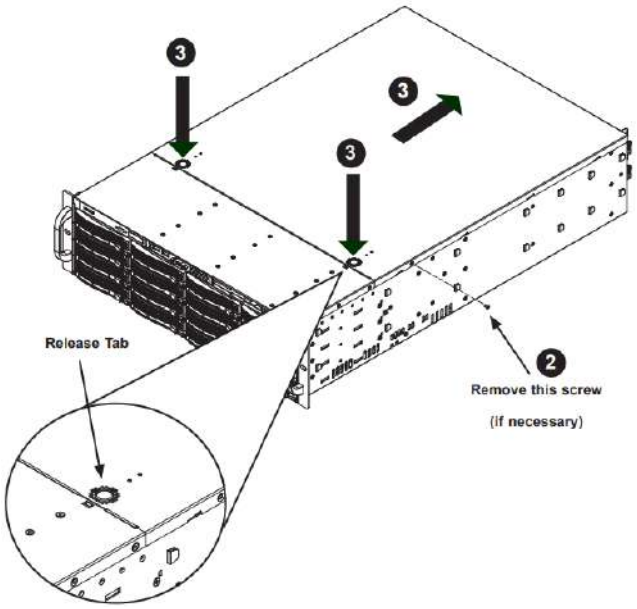

1. If necessary, unplug the chassis from any power source.
2. If necessary, remove the two screws securing the cover to the side of the chassis.
3. Depress the two release buttons, pushing the cover toward the rear of the chassis, and lift it up, and off.

© 2020 StoneFly, Inc. | All rights reserved.

Caution: Except for short periods of time, do not operate the server without the cover in place. The chassis cover must be in place to allow proper airflow and prevent overheating.

Removing / Replacing Hot-Swap Drives

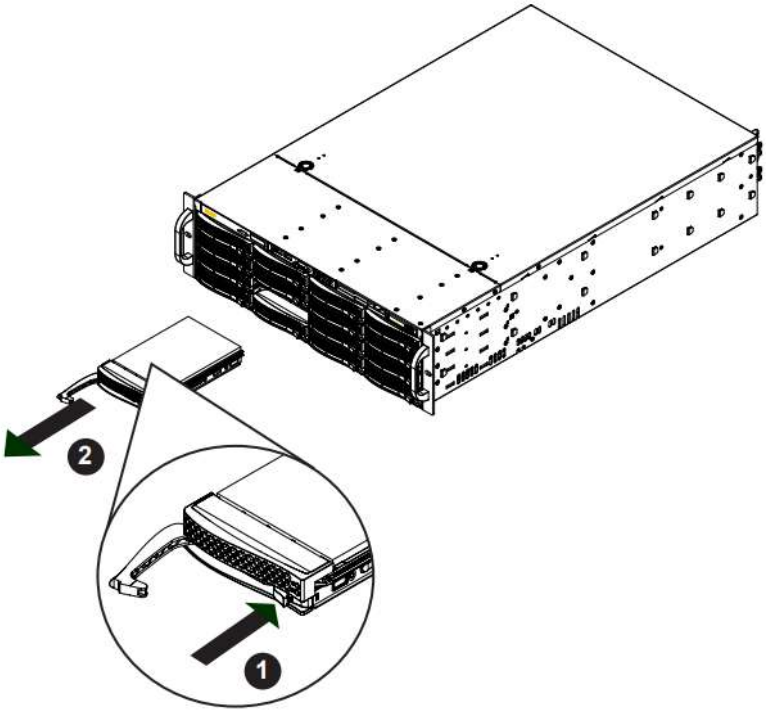

1. Press the release button on the drive carrier. This extends the drive carrier handle.
2. Use the handle to pull the drive carrier out of the chassis.

Caution: Except for short periods of time, such as while swapping hard drives, do not operate the server with the carriers removed from the chassis drive bays.

© 2020 StoneFly, Inc. | All rights reserved.

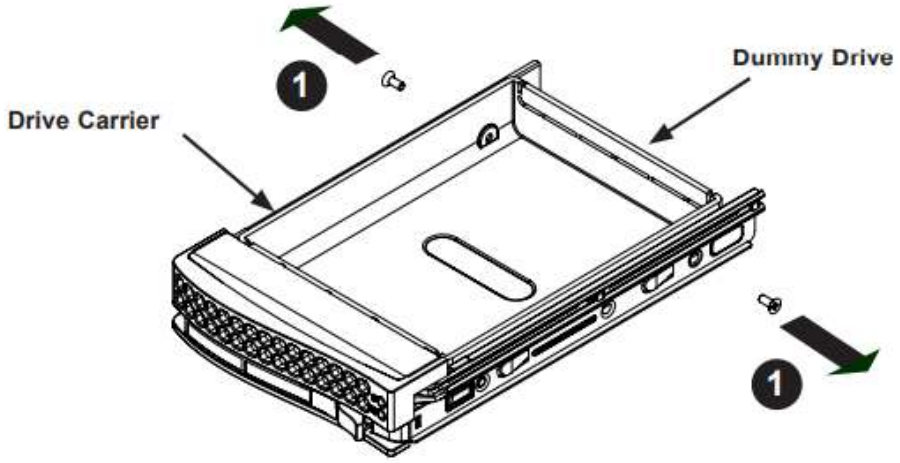

1. Remove the two screws securing the dummy drive to the drive carrier and remove the dummy drive. Place the hard drive carrier on a flat surface such as a desk, table or work bench.
2. Slide the hard drive into the carrier with the printed circuit board side facing down.
3. Carefully align the mounting holes in both the drive carrier and the hard drive.

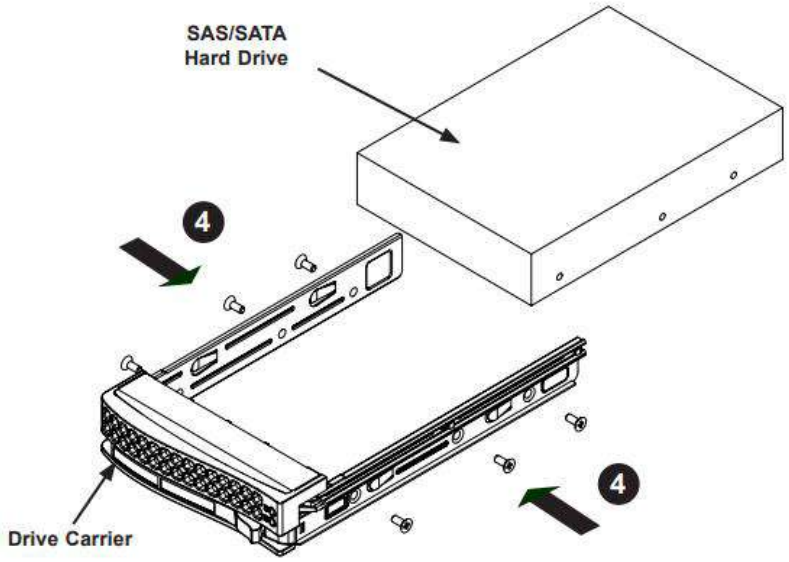

4. Secure the hard drive to the carrier using six screws.
5. Replace the drive tray into the chassis. Make sure to close the drive carrier handle to lock the drive carrier into place.

© 2020 StoneFly, Inc. | All rights reserved.

Removing a System Fan

Three hot-swappable, heavy-duty fans provide cooling from the middle of the chassis, augmented by two rear exhaust fans.

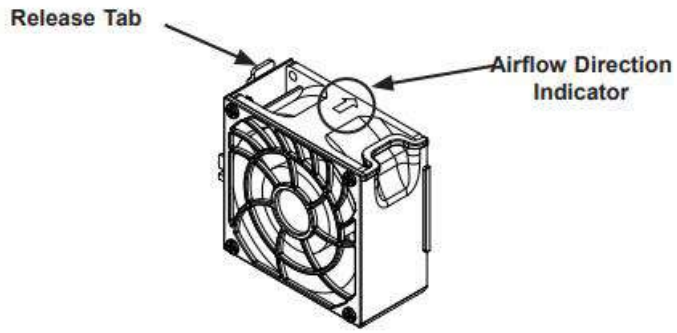

Replacing a System Fan

1. Open the chassis while the power is running to determine which fan has failed. (Never run the server for an extended period of time with the chassis cover open)
2. Power down the server and lay the chassis on a flat, stable surface and remove the chassis cover.
3. Remove the failed fan's power cord from the server board.
4. Press the fan release tab to lift the failed fan from the chassis and pull it completely out of the chassis.
5. Place the new fan into the vacant space in the housing while making sure the arrows on the top of the fan (indicating airflow direction) point in the same direction as the arrows on the other fans.
6. Power on the system and check that the fan is working properly before replacing the chassis cover.

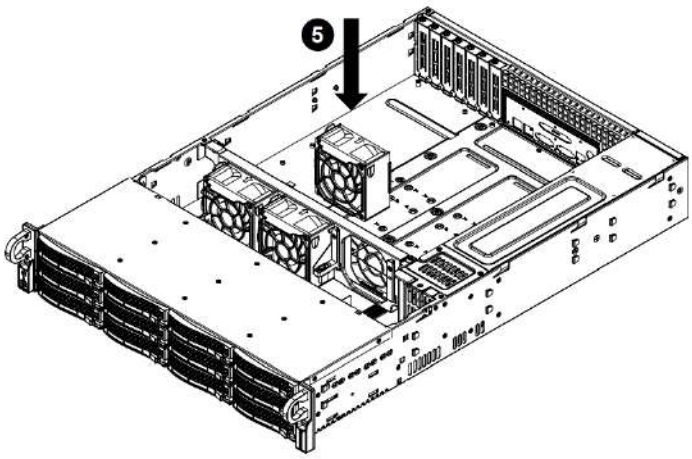

Placing the System Fan

© 2020 StoneFly, Inc. | All rights reserved.

Power Supply

The chassis has two redundant power supply modules. Redundant power supplies are hot-swappable, and can be changed without powering down the system. New units can be ordered directly from StoneFly, Inc.

This power supply is auto-switching capable. This enables it to automatically sense and operate at a 100v to 240v input voltage. An amber light will be illuminated on the power supply when the power is off. An illuminated green light indicates that the power supply is operating.

Changing the Power Supply

1. Unplug the AC cord from the module to be replaced.
2. Push the release tab on the back of the power supply as illustrated.

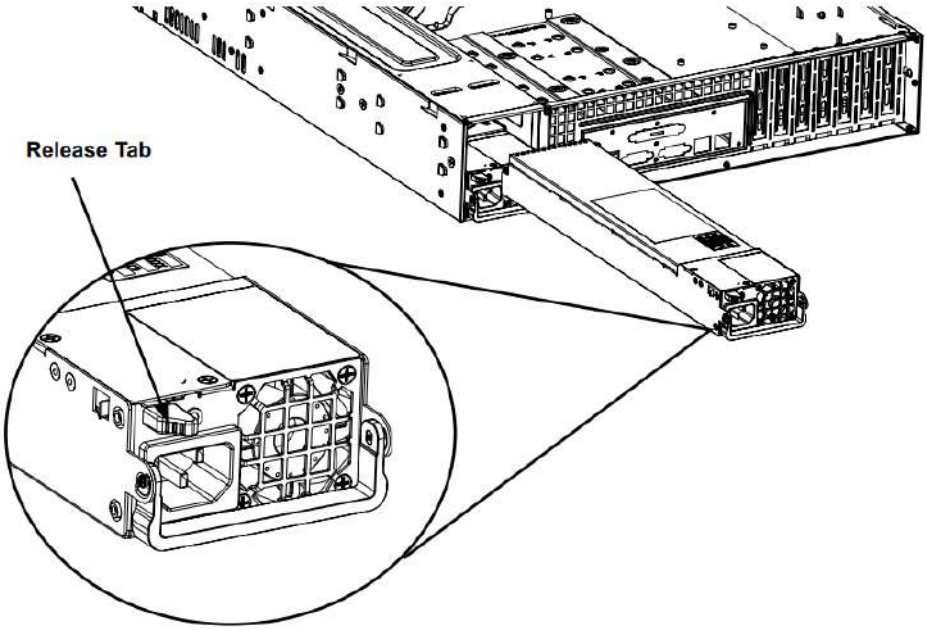

Power Supply Release Tab

3. Pull the power supply out using the handle provided.
4. Replace the failed power module with the same model.
5. Push the new power supply module into the power bay until it clicks.
6. Plug the AC power cord back into the module.

© 2020 StoneFly, Inc. | All rights reserved.

Troubleshooting Guide

In this section, we describe some of the most commonly encountered issues. If you cannot resolve your hardware problems using the information provided in this section, please contact support at the number listed on the README page attached to the system, or by using the information provided at the end of this document.

Question:

The unit is beeping, what do I do?

Answer:

- Make sure that all the cables, specially the power cables are connected.
- Check to see if any of the disk drives has failed.
- Check to see if a power supply has failed.

Question:

One of my power supplies or disk drives have failed, what do I do?

Answer:

Please contact StoneFly support at the number listed on the README page, which was shipped with the system, and request an RMA for the failed component.

Question:

When I power the system On, I get message “No Operating system found”. What should I do?

Answer:

It is possible that the boot sequence in the BIOS is attempting to boot the machine from the wrong device. Please enter the BIOS and set the OS disk as the first boot device. If it still does not work, please contact StoneFly technical support.

© 2020 StoneFly, Inc. | All rights reserved.

Appendix A

Possible Camera Configuration Examples:

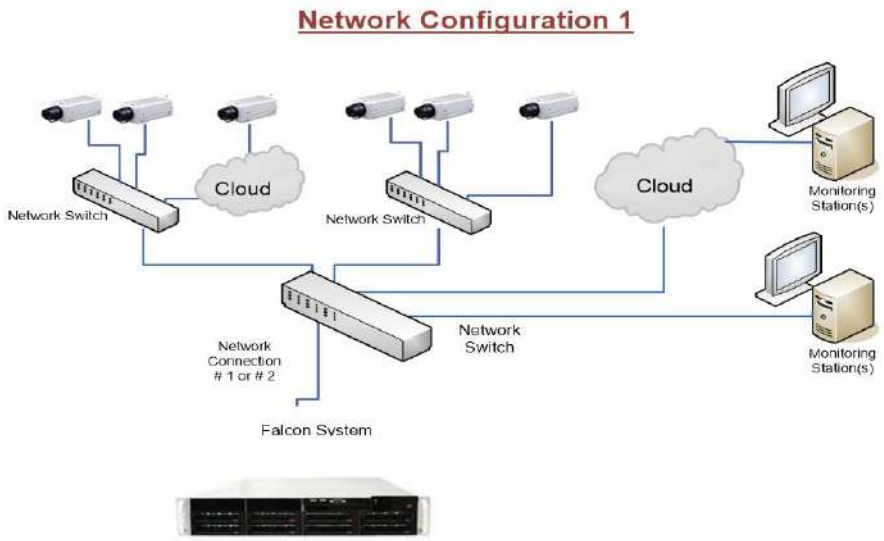

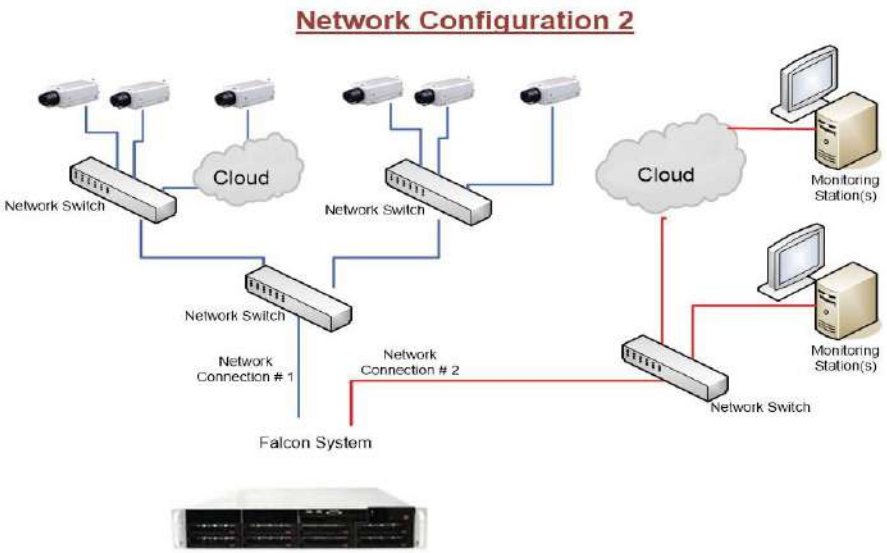

© 2020 StoneFly, Inc. | All rights reserved.

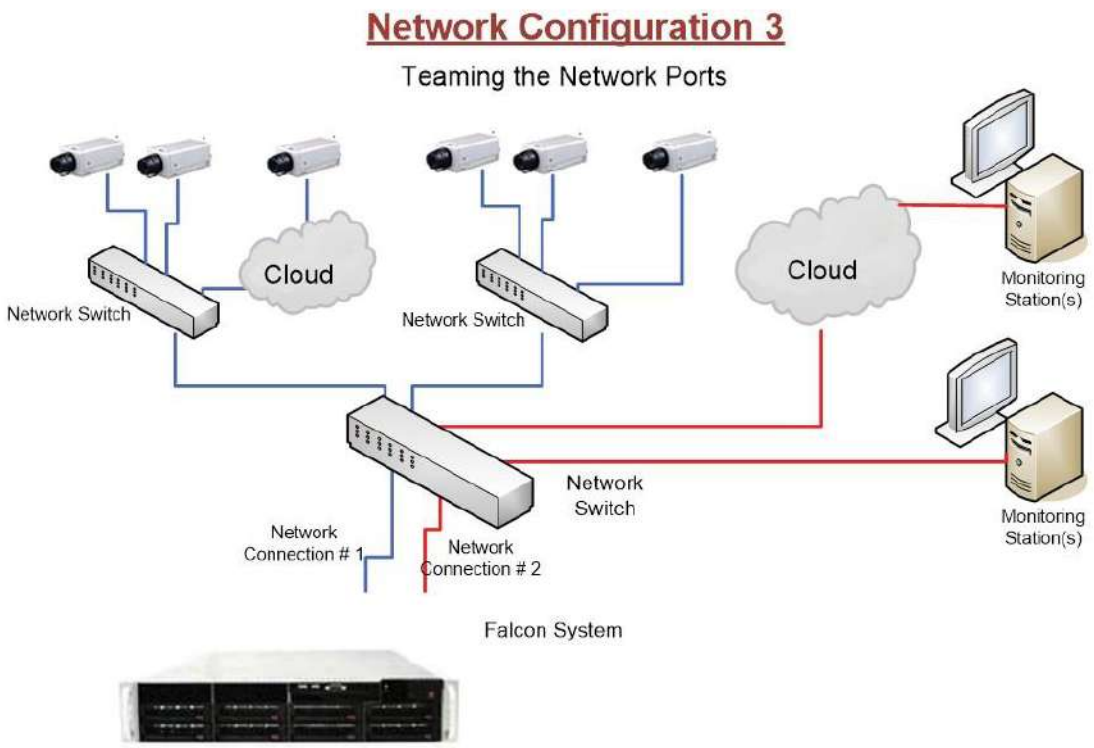

© 2020 StoneFly, Inc. | All rights reserved.

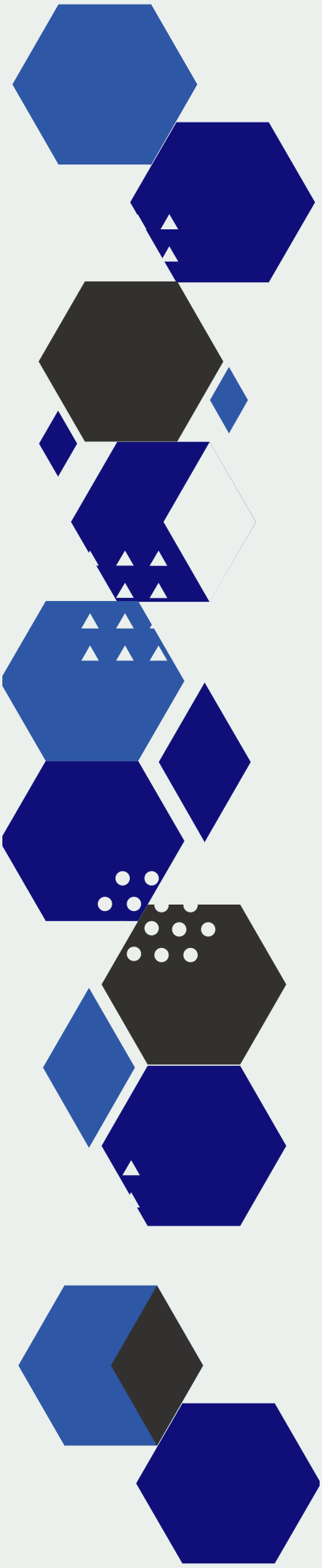

STONEFLY

www.stonefly.com
26250 Eden Landing Rd,
Hayward, CA 94545, USA.
+1 (510) 265-1616
support@stonefly.com