Setup Guide

ISC - Storage Area Network (SAN)

Appliance

ISC 8-bay 2U Rackmount

STONEFLY
www.stonefly.com
www.iscsi.com

This Page is intentionally left blank.

Copyright 2006 - 2020 StoneFly, Inc.

All rights are reserved. No part of this document may be photocopied or reproduced without the prior written consent of StoneFly.
The information contained in this document is subject to change without notice. StoneFly shall not be liable for errors contained herein or for consequential damages in connection with the furnishing, performance, or use of this material.
StoneFly, the StoneFly logo, Storage Concentrator, Integrated Storage Concentrator, ISC, Modular Storage Concentrator, StoneFly Backup Advantage, StoneFusion, StoneFly Replicator CDP, ValueSAN, Unified Scale Out, USO, Twin Scale Out, TSO, Unified Storage & Server, USS, Unified Deduplicated Storage, UDS, Unified Encrypted Storage, UES, OptiSAN, StoneFly Voyager, StoneFly Mirroring, Storage Concentrator Virtual Machine, SCVM, Software-Defined Unified Storage and SDUS are property of StoneFly, Inc., a wholly owned subsidiary of Dynamic Network Factory, Inc.
Other brands and their products are trademarks or registered trademarks of their respective holders.

Last update date: 04/2020

Table of Contents

1.1 INTRODUCTION 5
1.1.1 OTHER RESOURCES 5
1.2 CONVENTIONS 5
1.2.1 ICONS 5
2.1 PRODUCT OVERVIEW 7
2.1. ISC FEATURES AND BENEFITS 8
2.2. THEORY OF OPERATION 10
2.2.1. ISCSI OVERVIEW 10
2.2.2. IP SAN CONFIGURATION OVERVIEW 10
2.2.3. ISCSI HOST INITIATORS 10
2.2.4. BACK-END STORAGE 10
2.3 INSTALLATION 11
2.3.1 REQUIREMENTS 11
2.3.2 SETTING UP A SIMPLE IP SAN USING AN ISC 11
2.3.3 POWERING ON PROCEDURE 12
2.3.4 POWERING OFF PROCEDURE 12
2.3.5 JBOD LED LIGHT MENU 13
2.4 SAFETY INFORMATION 14
2.4.1 ENVIRONMENTAL 14
2.4.2 COMPLIANCE 14
2.5 PRODUCT REGISTRATION 14
2.6 CONTACTING STONEFLY FOR HELP 14
3.1 SETTING UP THE ISC AND JBODS 16
3.1.1 UNPACKING 16
3.1.2 RACK INSTALLATION INSTRUCTIONS FOR ISC 16
3.1.3 RACK INSTALLATION INSTRUCTIONS FOR JBOD 21
3.1.4 CABLING THE SYSTEM 25
3.1.5 CONFIGURING THE NETWORK SETTINGS FOR THE IPMI KVM 26
Accessing the IPMI Interface 31
3.1.6 CONFIGURING THE NETWORK SETTINGS FOR THE ISC MANAGEMENT PORT 33
3.1.7 STONEFUSION™ SOFTWARE CONFIGURATION 35
3.1.8 SETTING UP ROUTING 39
3.1.9 CONFIRMING SETUP 40
3.1.10 STEPS TO COMPLETE BEFORE SETTING UP THE SYSTEM 41
3.1.11 ATTACHING AND REMOVING THE FRONT BEZEL 41

 © StoneFly Inc. | All rights reserved

Chapter-1: Introduction

© StoneFly Inc. | All rights reserved

1.1 Introduction

This guide provides the information needed to perform the out-of-the-box setup and configuration tasks for the StoneFly ISC™ storage appliance.
After completing the steps in this guide, proceed to the StoneFly Storage Concentrator User's Guide. Refer to "Chapter 2 – Administrative Interface" for information on how to efficiently and effectively manage data storage, data protection, and data delivery on your network.
This setup guide is intended to be used by network administrators and assumes a basic understanding of:

- Local Area Networks (LAN)
- Ethernet and Ethernet-switching concepts
- Storage Area Networking (SAN)

1.1.1 Other Resources

Other useful information regarding the setup and use of your ISC can be found in the following places:

- StoneFly Storage Concentrator User's Guide
- The StoneFly Web site: www.stonefly.com
- The ISC Online Help in the administrative interface (following initial setup)

1.2 Conventions

The tables that follow list the conventions used throughout this Guide.

1.2.1 Icons

Icon	Type	Description
	Note	Special instructions or information
	Warning	Risk of system damage or a loss of data

© StoneFly Inc. | All rights reserved

Chapter-2: Overview

© StoneFly Inc. | All rights reserved

2.1 Product Overview

Based on the StoneFusion operating system, the ISC delivers iSCSI target volumes to hosts over TCP connections in an Ethernet network. ISC also offers Network Attached Storage (NAS) which allows multiple hosts/users share files. Configuring and managing ISC is accomplished using a browser-based graphical user interface (GUI) resident in the ISC. Storage resources are connected to the ISC through either internal drives or coming from one or more expansion boxes connected to the external SAS port (8-bay and higher). The system administrator uses the graphical user interface to allocate blocks of storage to create the iSCSI target volumes and authorizes their use by individual host systems.

Figure 1: ISC 8-Bay Model (without bezel)

StoneFly ISC comes in the following standard configurations:

- 4-bay model features maximum of 4 SATA or SSDs
- 6-bay model features maximum of 6 SATA or SSDs
- 8-bay model features maximum of 8 SAS or SSD
- 12-bay model features maximum of 12 SAS or SSD
- 16-bay model features maximum of 16 SAS or SSD
- 24-bay model features maximum of 24 SAS or SSD
- 36-bay model features maximum of 36 SAS or SSD

The ISC comes pre-configured in multiple RAID sets with hot spare drives. To change the RAID configuration settings you must use the RAID configuration utility for ISC. Please consult the RAID Controller Manual included on the documents CD.

ISC features a management port, one or two dual-port Gigabit Ethernet (GbE) cards for data I/O, and a SAS Raid HBA that drives internal drives and also has an external port for connection to expansion boxes

© StoneFly Inc. | All rights reserved

Figure 2: Back panel of JBOD

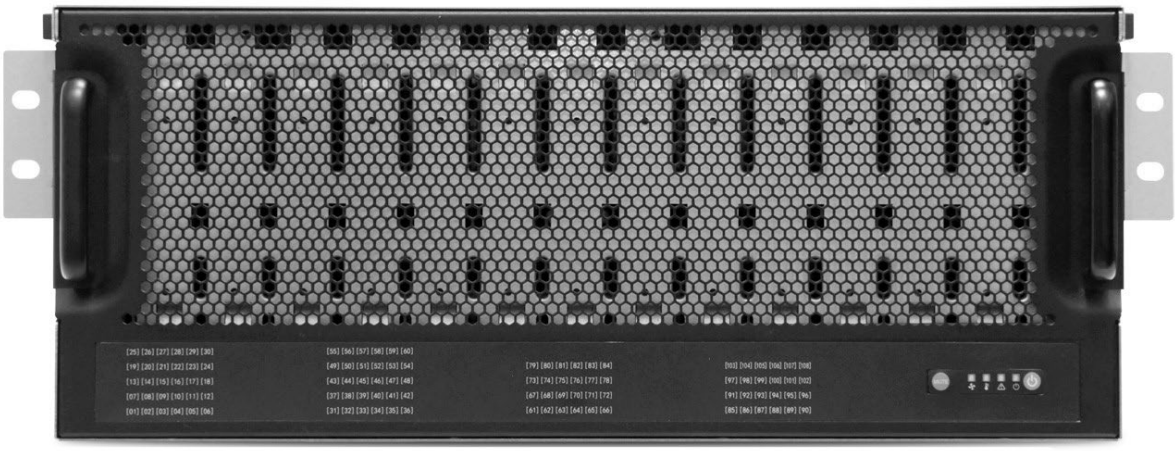

Figure 3: Front of JBOD

2.1. ISC Features and Benefits

The following table details additional features of the ISC.

Feature	Benefits
IP network-based SAN intelligence based on StoneFusion OS	• Less expensive to install and operate • Universal connectivity on IP networks • Uses existing network • No retraining of personnel on new technologies • Lowers total cost of ownership • No distance limitations for IP networks
Storage Provisioning	• Add, delete, or expand volumes easily • Maximizes utilization of storage resources • Responds to changes quickly

© StoneFly Inc. | All rights reserved

Mirroring	Supports both local and remote, synchronous and asynchronous mirroring with StoneFly Reflection™ and StoneFly Replicator(R) CDP software
Disk-to-Disk backup	• Simultaneous backup streams from multiple servers for faster, more reliable backups. • Nearly instantaneous restores from disk.
HTML-based GUI management	• Centralized storage management, control and monitoring of provisioned storage pools • Access and administer changes from a browser anywhere at any time • Secure access (https) • Easy and intuitive to use
Security	• Access Controls Lists designate which storage resources are accessible to which hosts and specify read/write, read only, or no access privileges. • CHAP (Challenge Handshake Authentication Protocol) supports passwords at the host or volume level.
Expandable storage capacity with additional storage resources (optional)	• Works with SAS JBODs containing SATA or SAS drives.
High availability	• Access local and remote copies of user configuration data
Object storage resources	• Integrated cloud connection to Microsoft Azure Blob Storage, Amazon AWS S3 and/or compatible AWS S3 storage

© StoneFly Inc. | All rights reserved

2.2. Theory of Operation

The StoneFly ISC is the mediator between hosts and storage devices in an IP network. IP-based Storage Area Networks (IP SANs) use the iSCSI protocol over an Ethernet and TCP/IP network. ISC also offers Network Attached Storage (NAS) which allows multiple host/users share files over an Ethernet network. Each server, host, or user that needs access to the SAN storage devices must implement the iSCSI protocol over an Ethernet and TCP/IP network.

2.2.1. iSCSI Overview

iSCSI is a protocol that enables the transmission of block-level data between storage resources and computers over an IP network. iSCSI combines Ethernet-based IP networking with the SCSI (small computer systems interface) command set—the core command set used in most storage configurations. By combining SCSI and IP networking, iSCSI incorporates the two most widely used storage and networking protocols.

2.2.2. IP SAN Configuration Overview

In addition to setting up the ISC, there are three other components which must be considered when setting up an ISC:
iSCSI host initiators
Back-end storage (optional)

2.2.3. iSCSI Host Initiators

An iSCSI host initiator is the component of a server that "initiates" or originates storage commands. There are three ways to set up iSCSI host initiators to work with the ISC:

1. Using software-based iSCSI initiators on hosts that are connected to the storage network and "see" logical volumes as disk drives. This configuration requires a NIC (Network Interface Card) to connect to the Gigabit Ethernet network.
2. Using an iSCSI adapter that interfaces with the host operating system (OS) in the same way as a storage Host Bus Adapter (HBA).
3. Using a TCP Offload Engine (TOE) adapter card to offload the computing-intensive processing associated with maintaining a TCP/IP connection. A typical implementation includes both a software component and a hardware component.

2.2.4. Back-End Storage

One of the major benefits of the ISC IP SAN appliance is the ability to expand using optional back-end storage. Back-end storage can use SAS JBODs (Just a Bunch of Disks) that can house SATA or SAS drives. The storage devices connect directly to the back of the ISC SAS port.
The ISC mediates requests from host servers for storage resources, just as servers mediate storage requests from end-user clients on the network. Therefore, it is prudent to set up the ISC on a dedicated Gigabit Ethernet storage network that is operating independently of the LAN that mediates traffic between clients and hosts.
It is recommended that you setup a dedicated subnet running on a 10/100/1000 network to prevent management of the IP SAN from interfering with data I/O traffic.

© StoneFly Inc. | All rights reserved

2.3 Installation

2.3.1 Requirements

The following minimum network system requirements must be met before attempting to install an ISC:

1. Connectivity to an Ethernet network (10/100/1000)
2. Storage resources (devices) are either internal drives or coming from expansion box(es) connected to an external SAS port.
3. Computer must have one of the following browsers:
    a. FireFox 1.0 or later or Netscape 4.7 or later (Windows PC or Linux)
    b. Internet Explorer 5.0 or later (Windows PC only)

2.3.2 Setting Up a Simple IP SAN Using an ISC

To set up a simple IP SAN using an ISC, use the steps that follow:

1. Connect your SAS JBOD storage (if you have any) to the back of the ISC (optional).
2. Install the ISC using the steps that follow:
    a. Connect the ISC to the switch. If you are using the multi-port GbE connections, you can plug in all or some of the connections. Only by plugging in more than one connection will you have automatic Adaptive Load Balancing.
    b. Connect the ISC to power using the power cord connection.
3. Connect a laptop or other local computer to the Management port using a cross-over cable either directly or through an Ethernet switch.
4. Set up the IP network so that the Management port is on a different subnet than the main network.
5. Configure the ISC and provision your storage volumes.
6. Install iSCSI initiators composed of either iSCSI adapter cards or iSCSI HBAs into the servers or use iSCSI software initiators for standard network interface cards (NICs) installed in the servers.
7. Connect the servers to the Gigabit Ethernet switch.
8. Set up the initiators on the servers to recognize the provisioned storage volumes and configuring security settings.

© StoneFly Inc. | All rights reserved

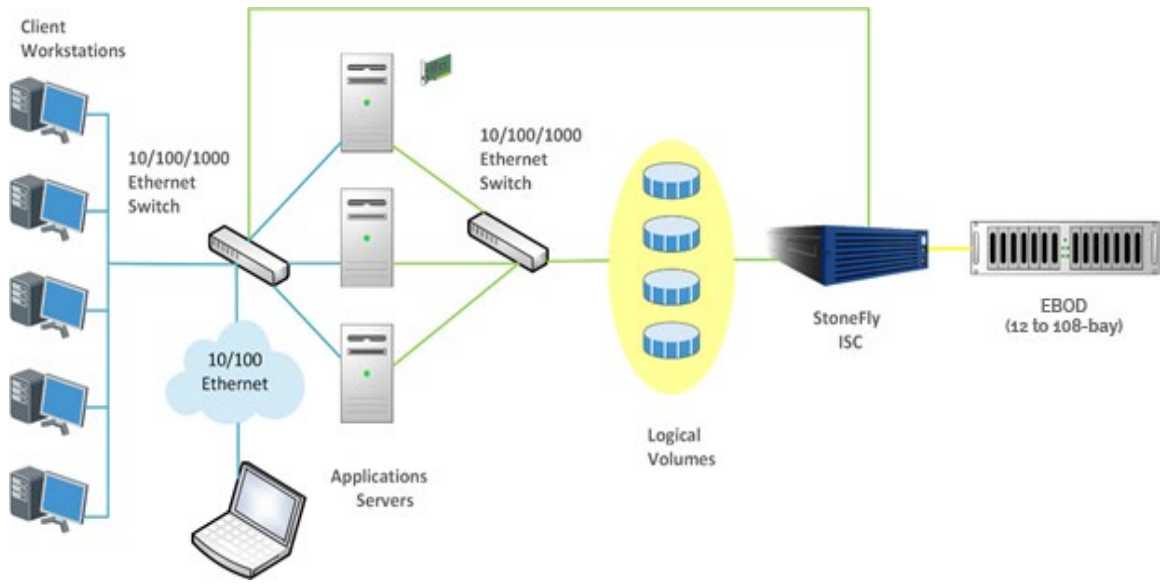

Figure 4: A typical configuration of ISC

2.3.3 Powering On Procedure

Kindly adhere to the following instructions when attempting to power on the appliance:

1. Verify that all the Power cables and SAS Cables are properly connected
2. Power on both the JBODs
3. Wait for the drives to finish initialization, it may take up to 10-20 Minutes depending on number of drives
4. Power on the ISC Appliance

2.3.4 Powering Off Procedure

Kindly adhere to the following instructions when attempting to shut down the appliance:

1. Shutdown the ISC Appliance carefully
2. Once the ISC Appliance is powered off, shutdown the JBODs.

© StoneFly Inc. | All rights reserved

2.3.5 JBOD LED Light Menu

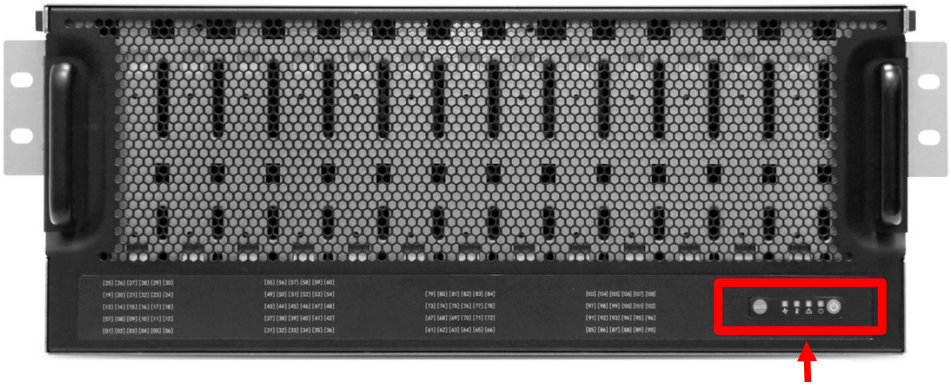

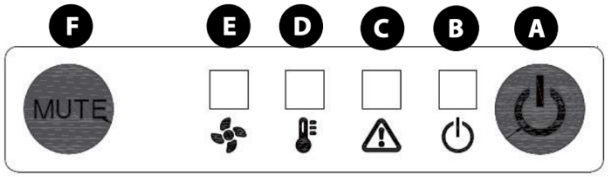

A

System Power	
Behavior	Status
Normal	Off
Press	Boot up
Long Press	System shut down

B

Power LED	
Behavior	Status
On	Blue
Off	No status

C

Power Fail LED	
Behavior	Status
Normal	Off
Failed	Red

D

Temperature (Overheating) LED	
Behavior	Status
Normal	Off
Failed	Red

E

Fan Fault LED	
Behavior	Status
Normal	Off
Failed	Red

F

System Alert Mute Switch	
Behavior	Status
Normal	Off
Press	Alert mute

© StoneFly Inc. | All rights reserved

2.4 Safety Information

Please review the following safety information completely before installing your ISC.

2.4.1 Environmental

Requirements for power and network availability must be taken into consideration when planning where to place your ISC. The space should have well regulated temperature and humidity and should be relatively free of dust and other contaminants. The list below provides specifics on the environmental requirements:

Operating temperature: +50 F to +95 F (10 C to 35 C)
Altitude: -50 to 10,000 feet (-16 to 3048 meters)
Relative humidity: 8% to 80% (non-condensing)

2.4.2 Compliance

FCC 47 CFR Part 15, Class A
CSA C1088, Class A
UL 60950; CUL 60950
CE Mark (EN 455022, Class A/EN 455024)

2.5 Product Registration

To initiate StoneFly customer service for your product, you must first register your ISC. Go to the StoneFly web site at: www.stonefly.com/support/register.asp or mail in the registration card that was included with your ISC.

Please have the following information available when registering your ISC:
Model Number: _____
Serial Number: D500 _ _ _ _

2.6 Contacting StoneFly for Help

Please have the following information available when contacting StoneFly technical support for assistance:
Model Number: _____
Serial Number: D500 _ _ _ _
Software Version: _____
Initiators: _____
Storage: _____
Storage Serial Number(s): _____

To contact StoneFly, call 510.265.1616 and select support from the menu or go to the StoneFly support page at https://www.stonefly.com/support and fill out the contact form.

© StoneFly Inc. | All rights reserved

Chapter-3: Initial Installation

© StoneFly Inc. | All rights reserved

3.1 Setting Up the ISC and JBODs

This section will provide step-by-step instructions for initial system configuration and hardware setup of the ISC.

3.1.1 Unpacking

Unpack the hardware from the box. You will find:

- The ISC appliance
- Two JBOD appliances
- The front bezel for the ISC
- Power cords
- A product registration card for the ISC
- A documentation CD with the StoneFly Storage Concentrator User's Guide and all other documentation
- A StoneFusion Operating System CD for system recovery

3.1.2 Rack Installation Instructions for ISC

This section provides information on installing the StoneFly ISC appliance into a rack or cabinet with the rails provided. There are a variety of rack/cabinet units on the market, which may mean that the assembly procedure will differ slightly. You should also refer to the installation instructions that came with the rack unit you are using.
This section is written for 2U ISC, but other ISC rack installations are similar.

NOTE: This rail will fit a rack/cabinet between 26" and 33.5" deep.

Identifying the Sections of the Rack Rails
The StoneFly ISC chassis package includes two rack rail assemblies in the rack mounting kit. Each assembly consists of three sections: an inner rail that secures directly to the chassis, an outer rail that secures to the rack, and a middle rail which extends from the outer rail. These assemblies are specifically designed for the left and right side of the chassis.

© StoneFly Inc. | All rights reserved

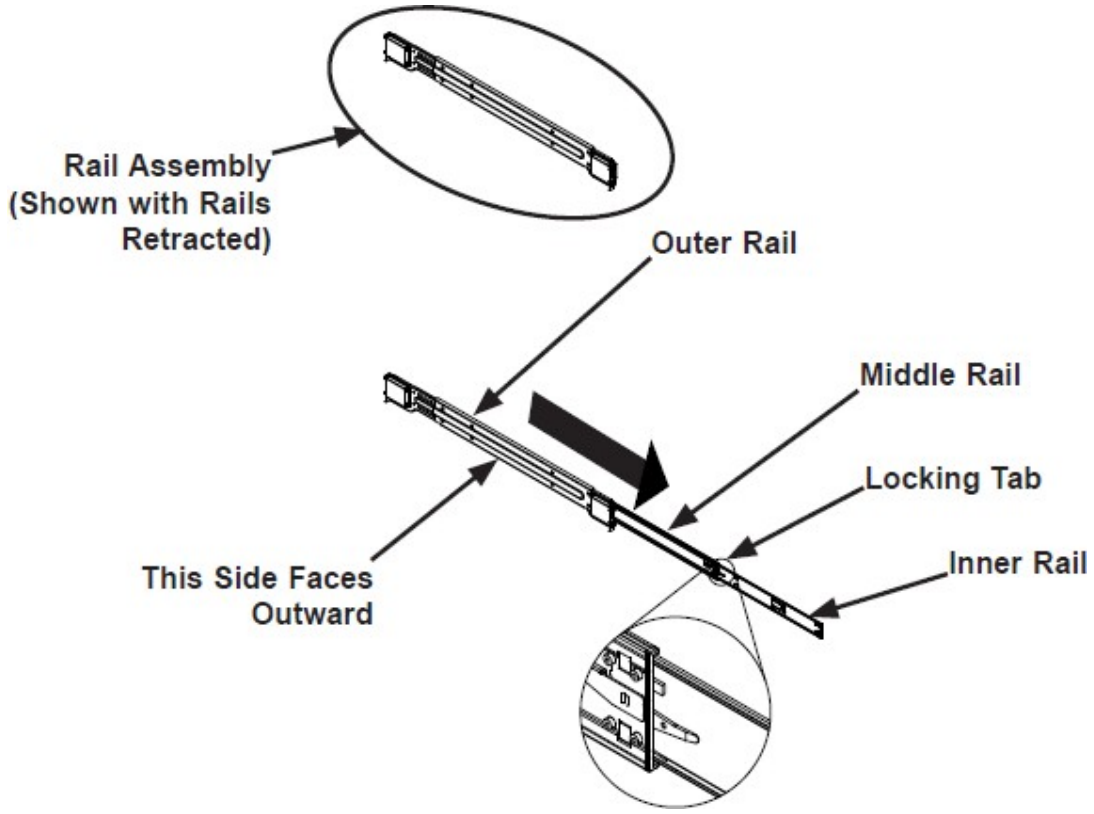

Figure 5: Identifying the Outer Rail, Middle Rail and Inner Rail
(Left Rail Assembly Shown)

Releasing the Inner Rail
Each inner rail has a locking latch. This latch prevents the server from coming completely out of the rack when the chassis is pulled out for servicing. To mount the rail onto the chassis, first release the inner rail from the outer rails.

Releasing the Inner Rail from the Outer Rails:

i. Pull the inner rail out of the outer rail until it is fully extended as illustrated below.
ii. Press the locking tab down to release the inner rail.
iii. Pull the inner rail all the way out.
iv. Repeat for the other outer rail.

© StoneFly Inc. | All rights reserved

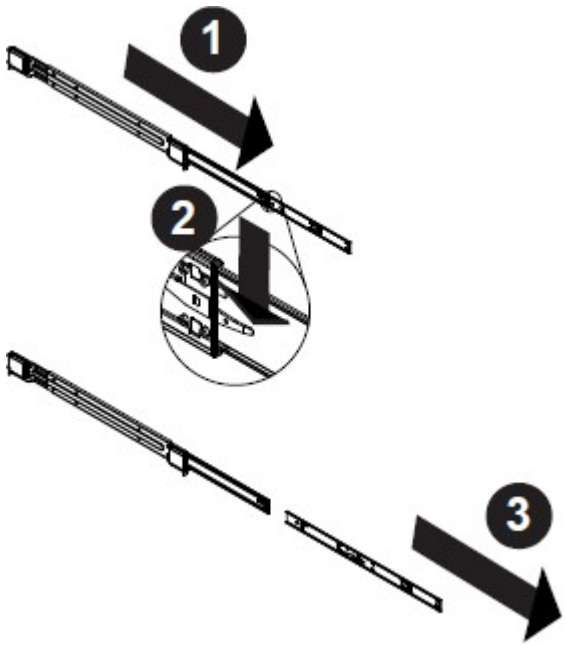

Figure 6: Extending and Releasing the Inner Rail

Installing the Inner Rails on the Chassis

Installing the Inner Rails

1. Identify the left and right inner rails. They are labeled.
2. Place the inner rail firmly against the side of the chassis, aligning the hooks on the side of the chassis with the holes in the inner rail.
3. Slide the inner rail forward toward the front of the chassis until the quick release bracket snaps into place, securing the rail to the chassis.
4. Optionally, you can further secure the inner rail to the chassis with a screw.
5. Repeat for the other inner rail.

© StoneFly Inc. | All rights reserved

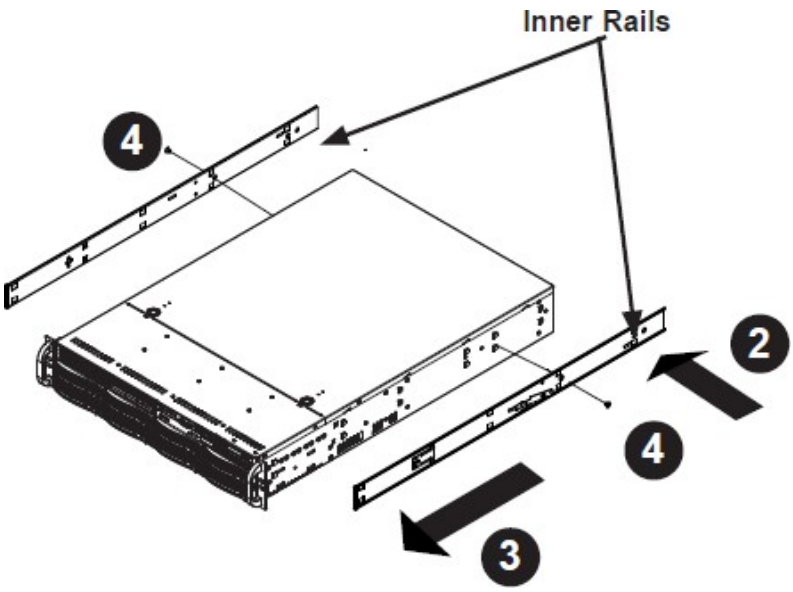

Figure 7: Installing the Inner Rails

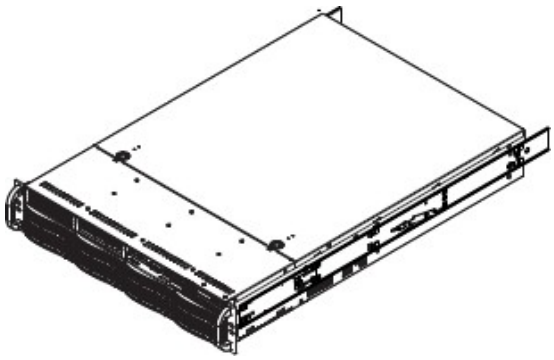

Figure 8: Inner Rails Installed on the Chassis

Installing the Outer Rails onto the Rack

Installing the Outer Rails

1. Press upward on the locking tab at the rear end of the middle rail.
2. Push the middle rail back into the outer rail.
3. Hang the hooks on the front of the outer rail onto the square holes on the front of the rack. If desired, use screws to secure the outer rails to the rack.
4. Pull out the rear of the outer rail, adjusting the length until it just fits within the posts of the rack.
5. Hang the hooks of the rear section of the outer rail onto the square holes on the rear of the rack. Take care that the proper holes are used so the rails are level. If desired, use screws to secure the rear of the outer rail to the rear of the rack.

© StoneFly Inc. | All rights reserved

The rack stabilizing mechanism must be in place, or the rack must be bolted to the floor before you slide the unit out for servicing.
Failure to stabilize the rack can cause the rack to tip over. Do not use a two post “telco” type rack.

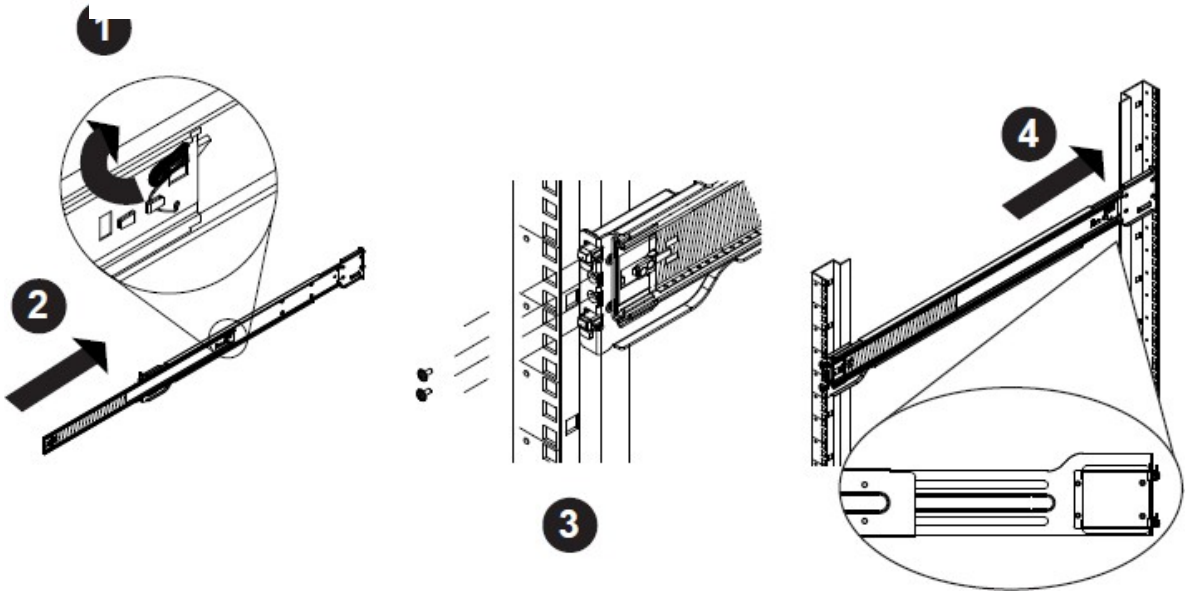

Figure 9: Extending and Mounting the Outer Rails

Sliding the Chassis onto the Rack Rails

Warning: Mounting the system into the rack requires at least two people to support the chassis during installation. Please follow the afety recommendations printed on the rails.

Installing the Chassis into a Rack

1. Extend the outer rails as illustrated above.
2. Align the inner rails of the chassis with the outer rails on the rack.
3. Slide the inner rails into the outer rails, keeping the pressure even on both sides. When the chassis has been pushed completely into the rack, it should click into the locked position.
4. Optional screws may be used to hold the front of the chassis to the rack.

© StoneFly Inc. | All rights reserved

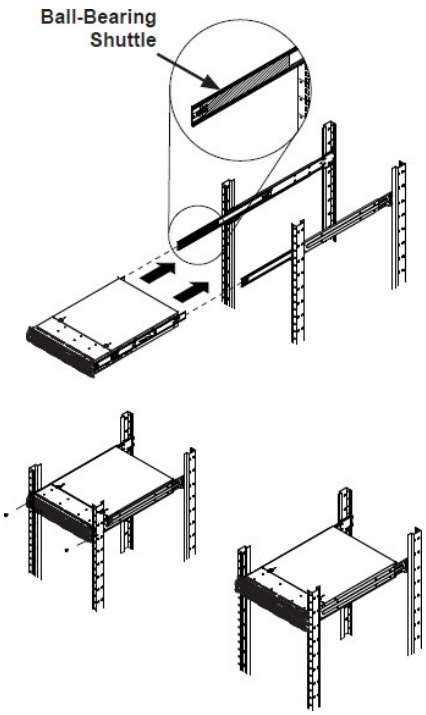

Figure 10: Installing the Chassis into a Rack

Note: The figure above is for illustrative purposes only. Always install servers to the bottom of the rack first.

Caution: Do not pick up the server with the front handles. They are designed to pull the system from a rack only.

3.1.3 Rack Installation Instructions for JBOD

A) Attach the slide rail bracket assembly to the rack frame

1. Align and attach the front rail bracket to the rack.
2. Ensure that the latch on the rail is hooked onto the rack.

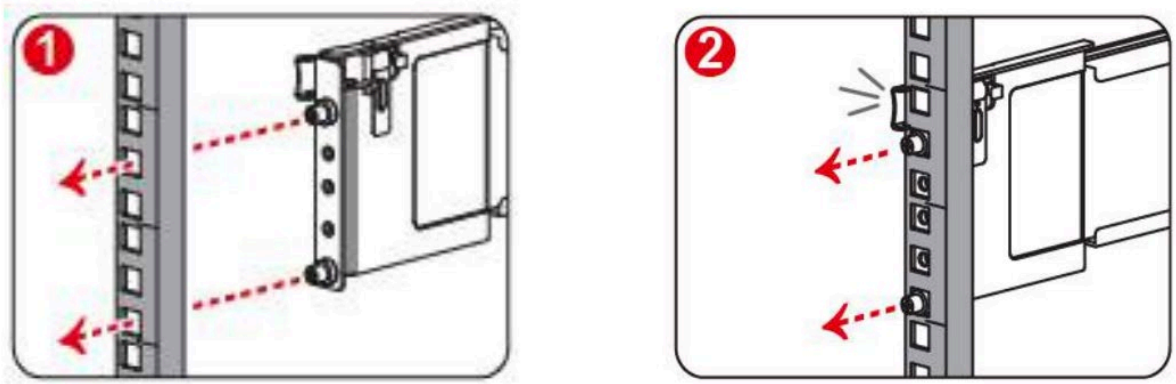

© StoneFly Inc. | All rights reserved

3. Align and attach the rear rail bracket to the rack by pushing the latch outward. Ensure the latch is hooked onto the rack.
4. Ensure that the latch on the rail is hooked onto the rack.

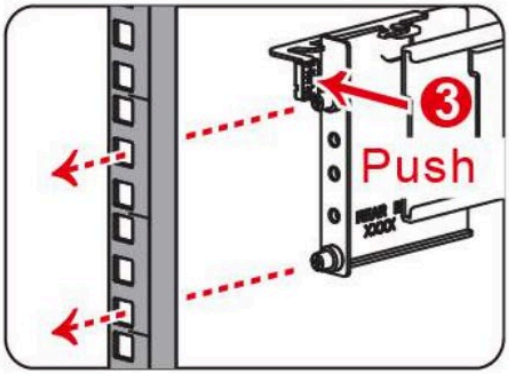

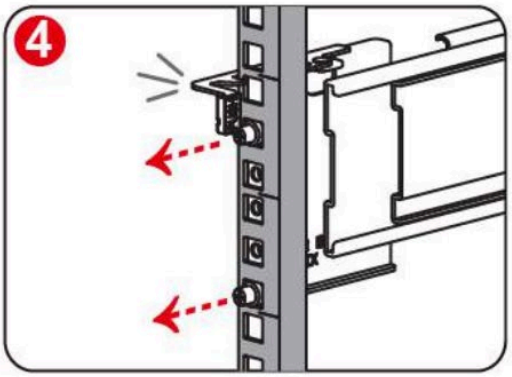

5. Secure the rail bracket with a washer and screw on both sides of the rail bracket.

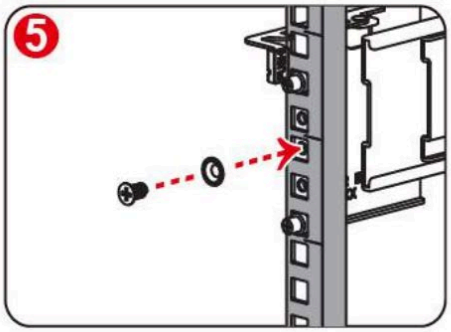

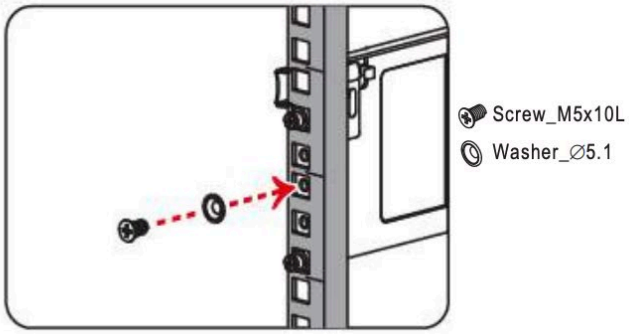

6. Repeat Steps 1 to 5 to install the other side of the rack.

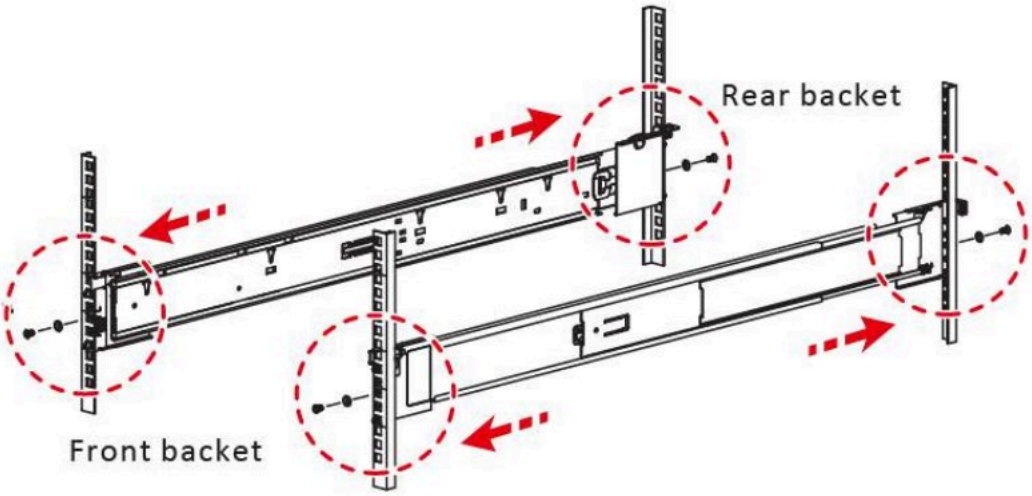

B) Attach the chassis onto the rack frame.

© StoneFly Inc. | All rights reserved

1. Pull the inner and middle rail to fully locked position. The length of the rail will stop at 960mm. Push the release tab on the side of the rail to release the inner rail to full length (1100mm).

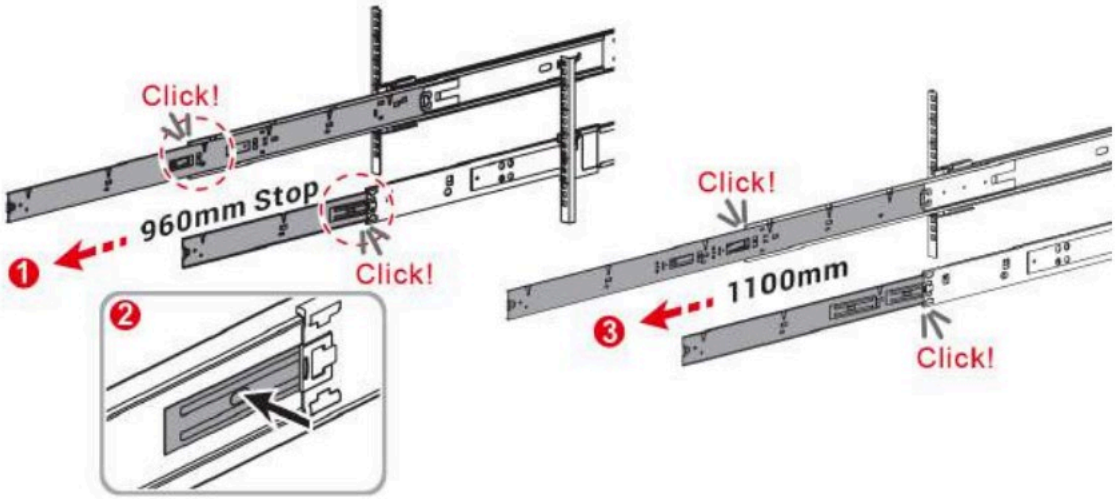

2. Position the chassis vertically into the rail. Ensure the standoffs on the chassis slide into the v slots on the rail bracket

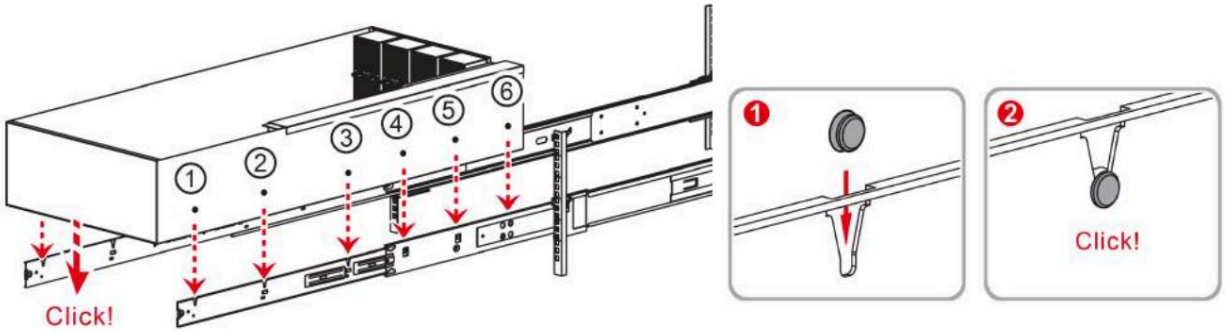

3. Secure the chassis to the rail with screws

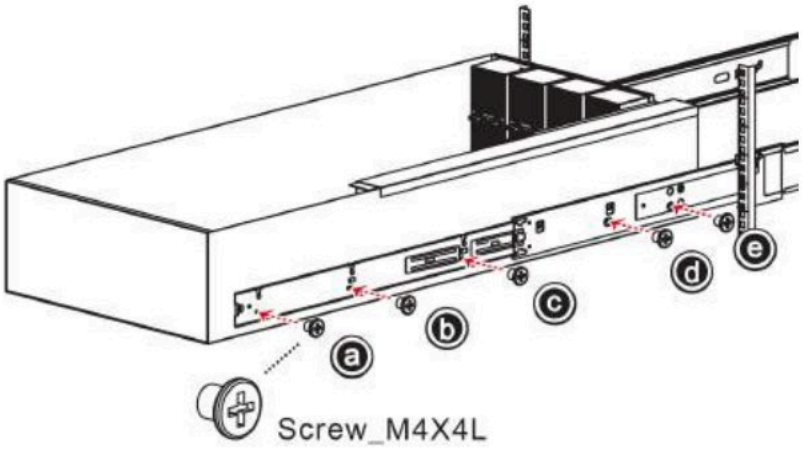

4. Push the release tab on the inner rail and push the chassis into the frame.

© StoneFly Inc. | All rights reserved

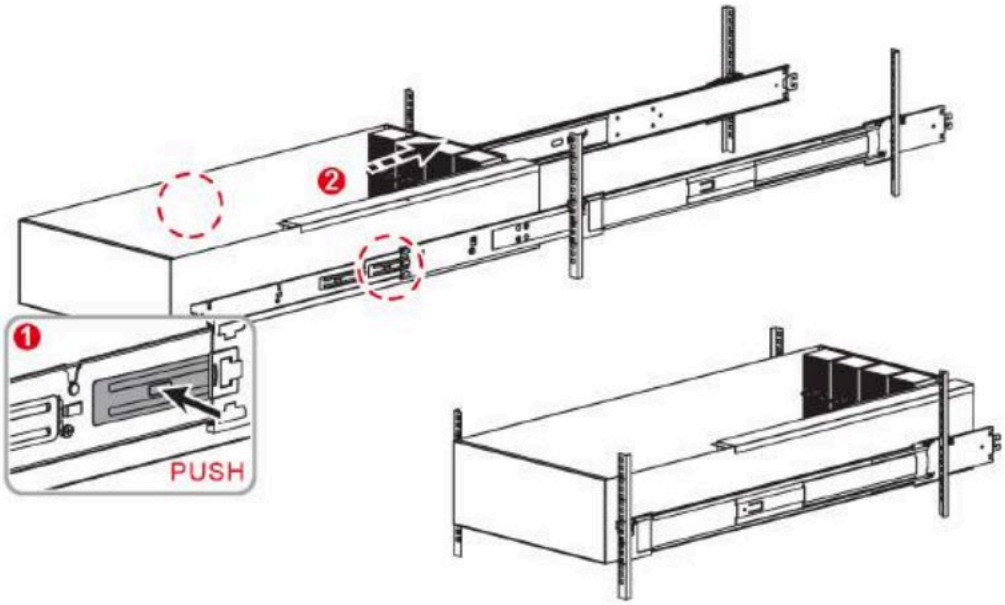

© StoneFly Inc. | All rights reserved

3.1.4 Cabling the System

To cable the StoneFly ISC system, follow these steps:

1. Configure a PC and the ISC as described in the section 3.1.4. Refer to the MGMT port indicator in the following picture.

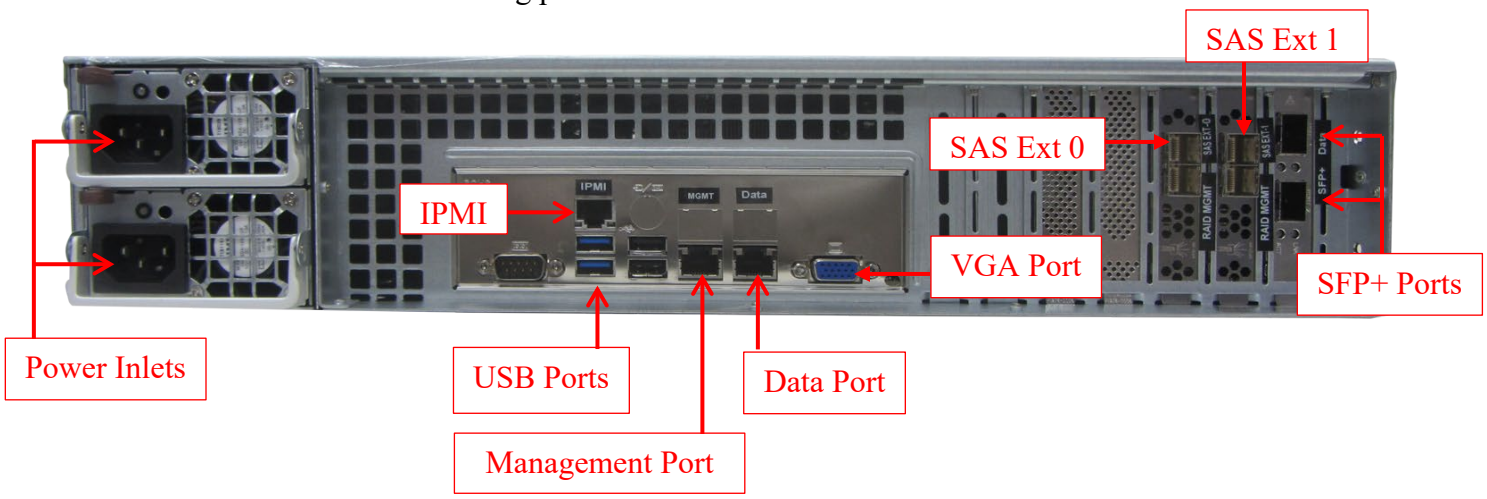

Figure 11: ISC 8-Bay Back Panel View

2. Connect the power cords to the two power cord connections on the back panel.
3. With the front bezel removed power on the *ISC.* It may take several minutes for the *ISC* to boot.

© StoneFly Inc. | All rights reserved

To cable the StoneFly ISC to the JBODS system, follow this diagram:

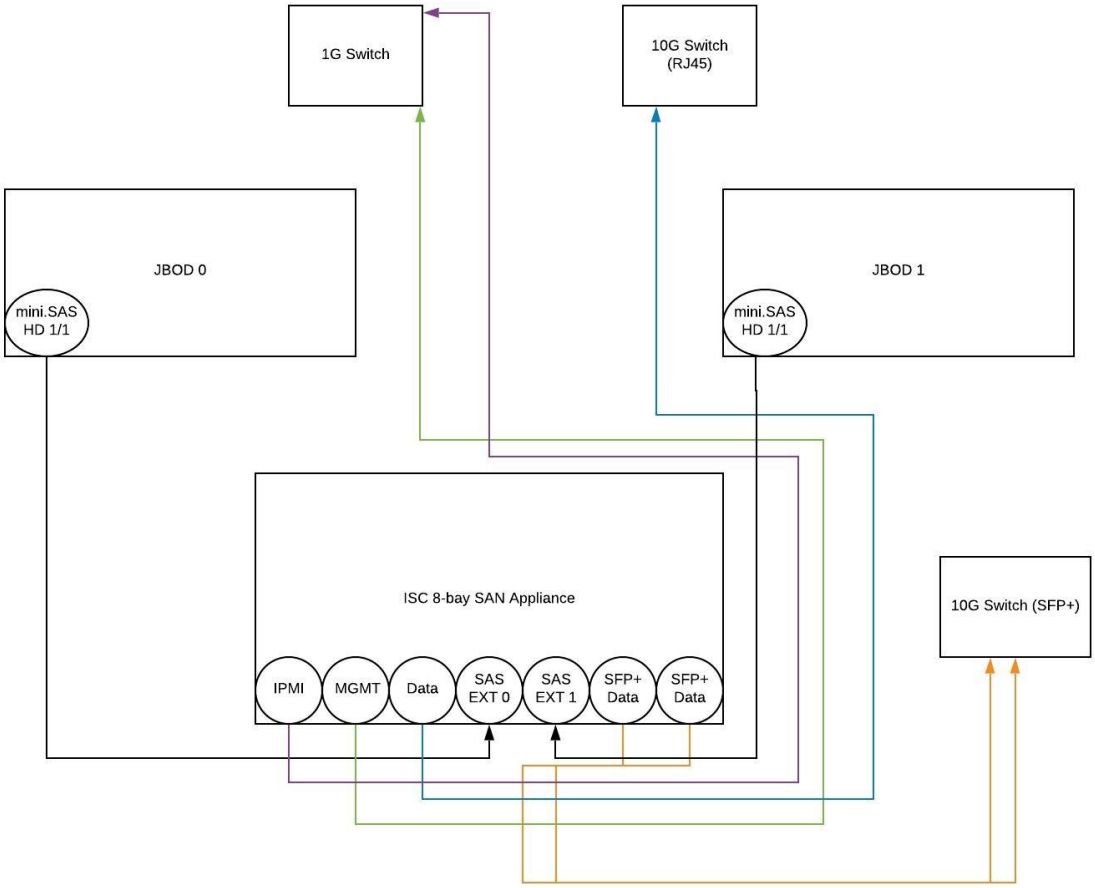

Figure 12: Appliance Overview

3.1.5 Configuring the Network Settings for the IPMI KVM

The Intelligent Platform Management Interface (IPMI) KVM configuration allows for **Remote Management** and **Power Control** of the StoneFly ISC SAN system. This configuration is optional to perform, but recommended.

Please note: The IPMI configuration applies to SAN systems with IPMI support. For more information, contact StoneFly technical support.

To configure the IPMI module, connect a Keyboard and Monitor to the System. Power on the system and press the **Delete** key to enter the BIOS setup.

© StoneFly Inc. | All rights reserved

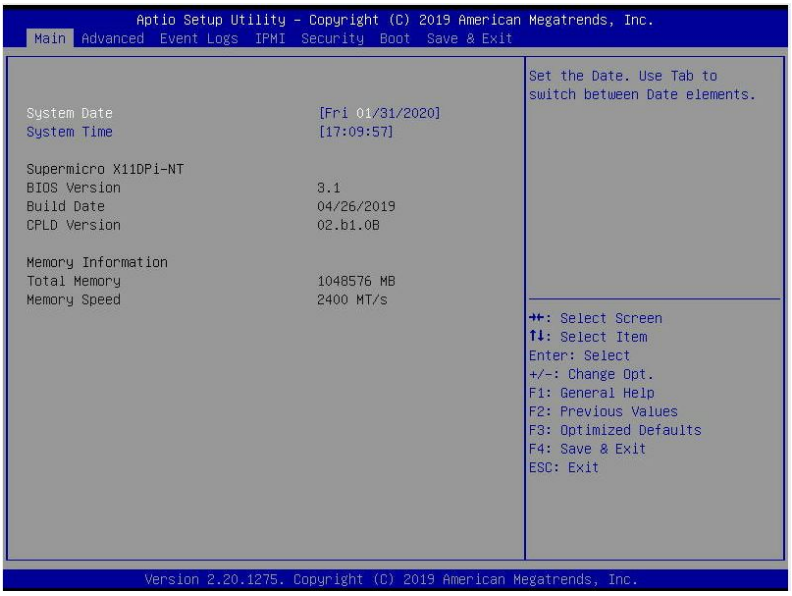

Navigate to **IPMI** tab and go to **BMC Network Configurations**:

In the **BMC Network Configuration** tab, select **Update IPMI LAN Configuration** and press **Enter**:

© StoneFly Inc. | All rights reserved

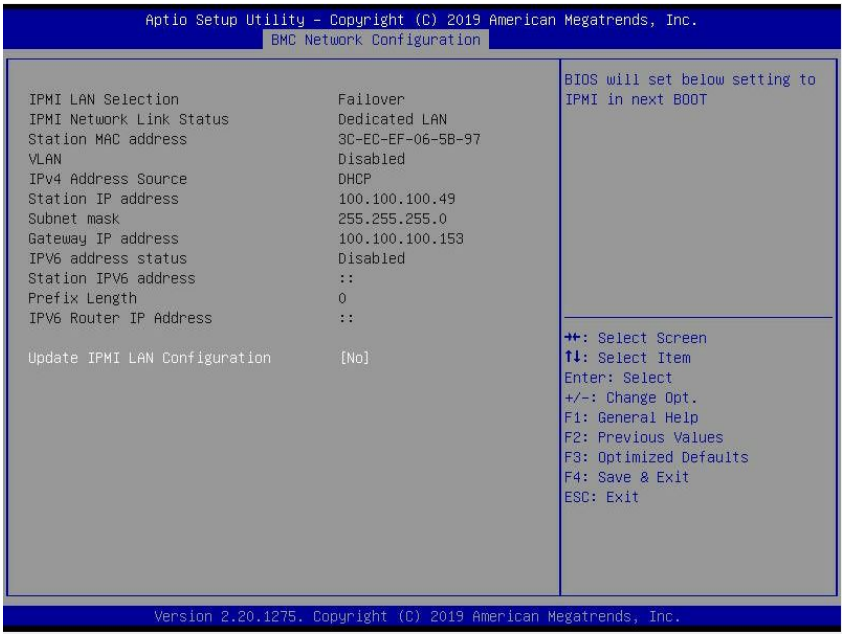

When prompted, select **Yes** and press **Enter**.

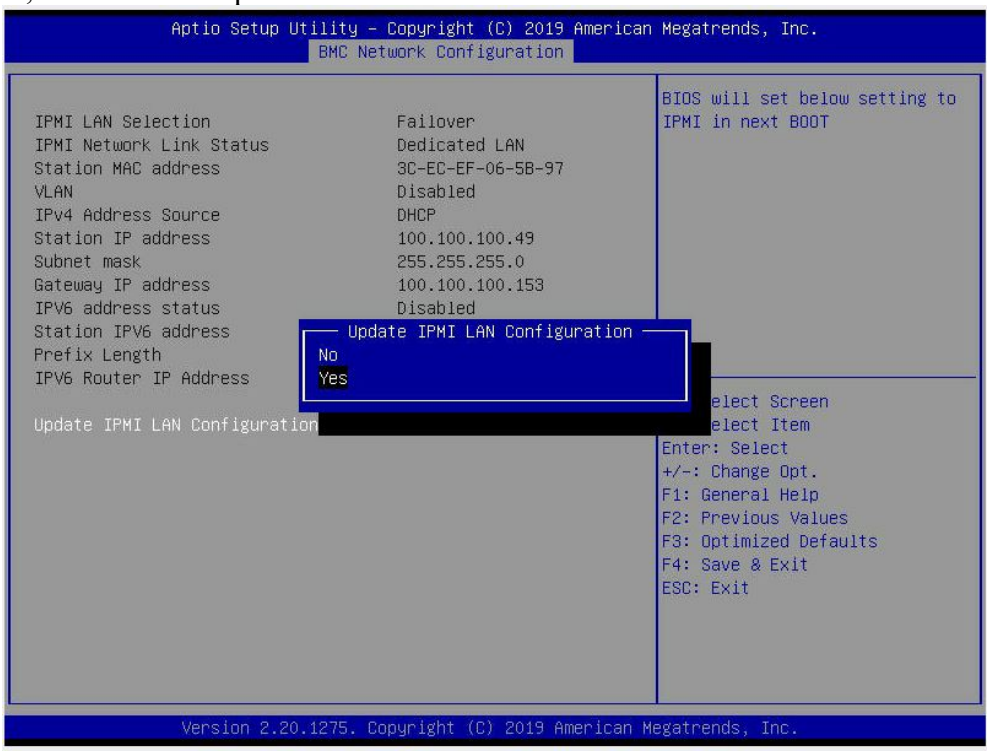

© StoneFly Inc. | All rights reserved

From the additional list of options, select **Configuration Address Source** and press **Enter**:

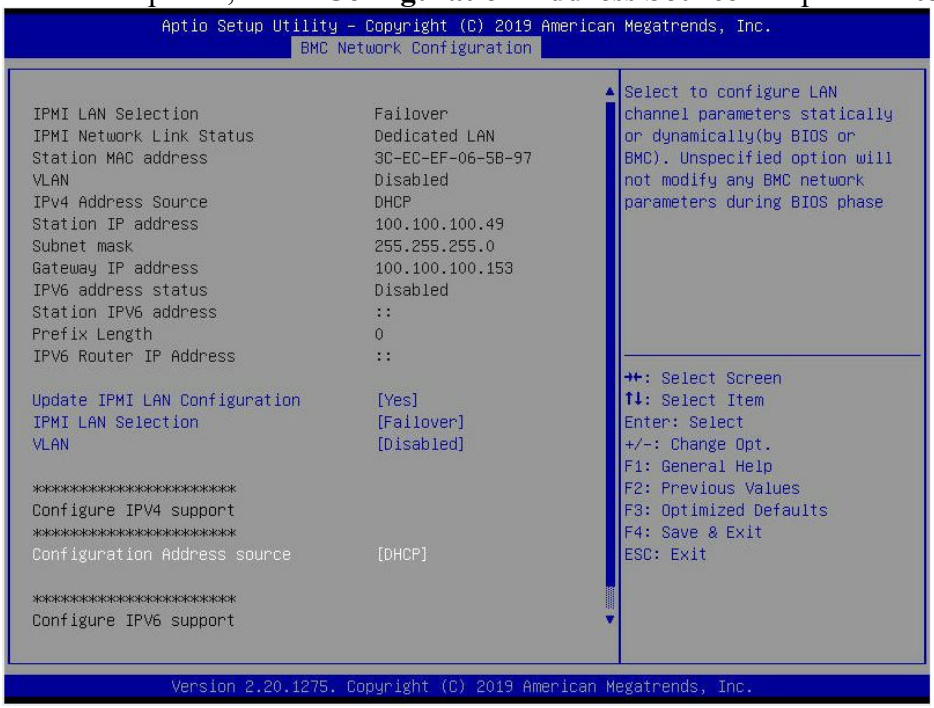

From the prompt, select **Static** and press **Enter:**

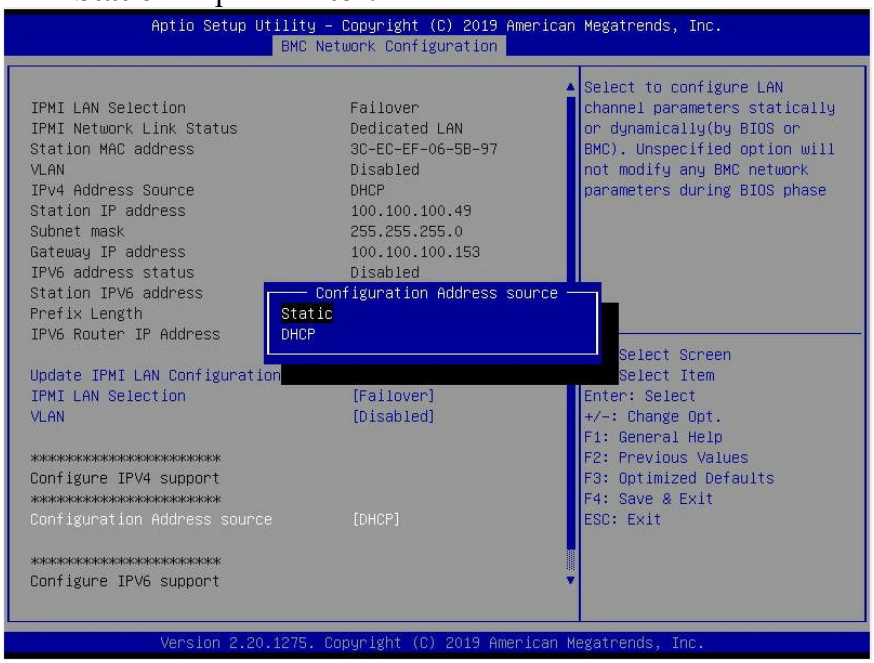

© StoneFly Inc. | All rights reserved

Enter the **Static IP Address, Subnet Mask** and **Gateway IP Address:**

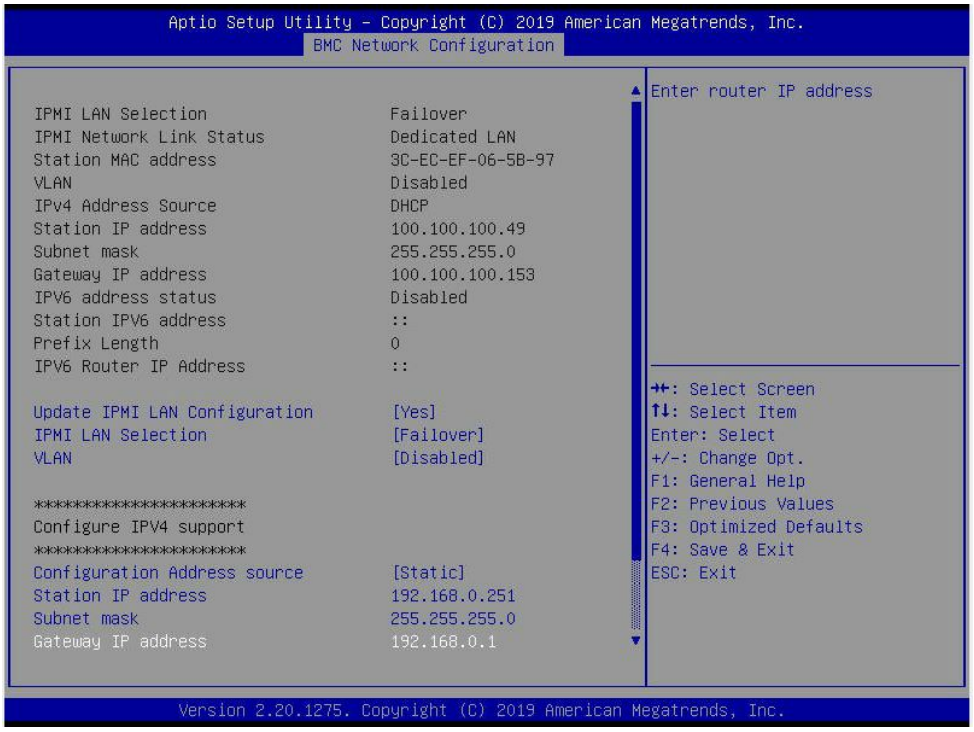

Adjust the following settings as needed: IP

Address Source	Choose “Static”
IP Address	Must be on the same subnet as the ISC’s Management port IP
Subnet Mask	Same as the ISC’s Management port
Default Gateway	Same as the ISC’s Management port
Update LAN Settings	Yes

Press the “ESC” key to exit. Navigate to the **Exit** tab and select **Save Changes and Exit**.

Note: Power cycle the system for the new IPMI IP Address to take effect.

© StoneFly Inc. | All rights reserved

Accessing the IPMI Interface

Open a web browser on a system running on the same subnet as the ISC's IPMI and navigate to the IP address you configured in the last section.

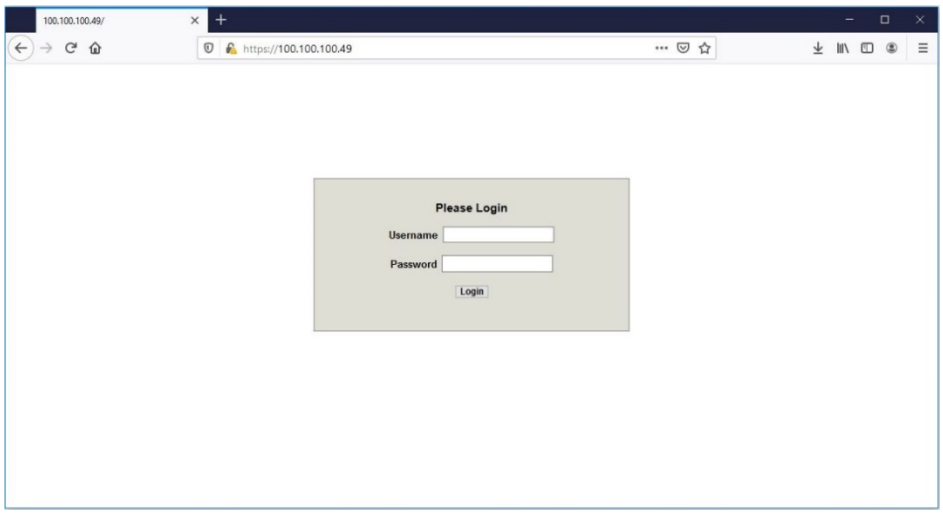

Enter the following information in the login screen:

- Username: **stonefly**
- Password: **Stonefly1**

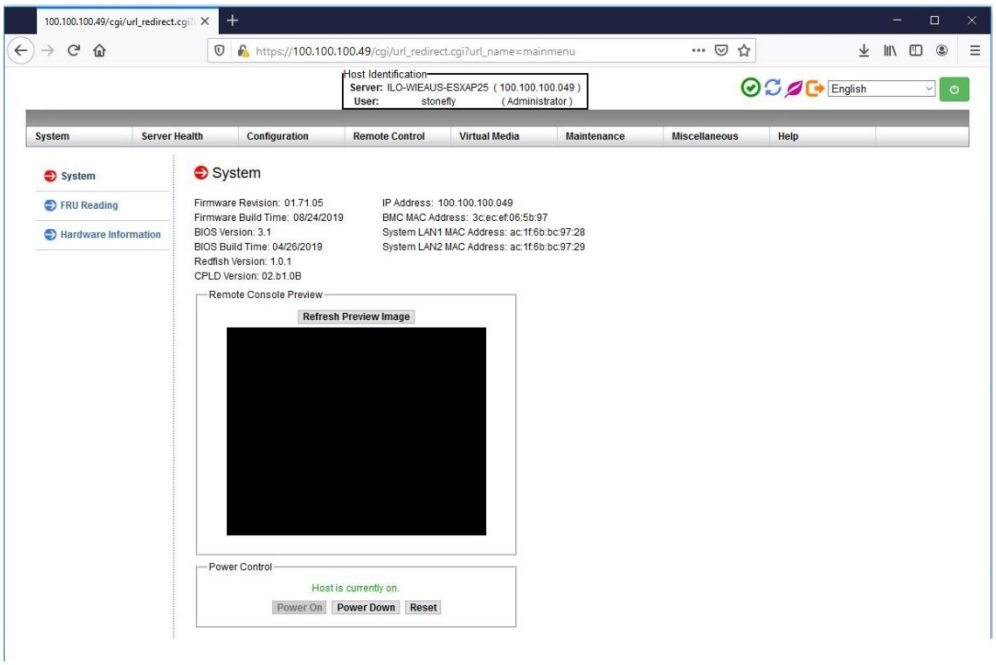

© StoneFly Inc. | All rights reserved

Navigate to **Remote Control** tab and select **iKVM/HTML5.**

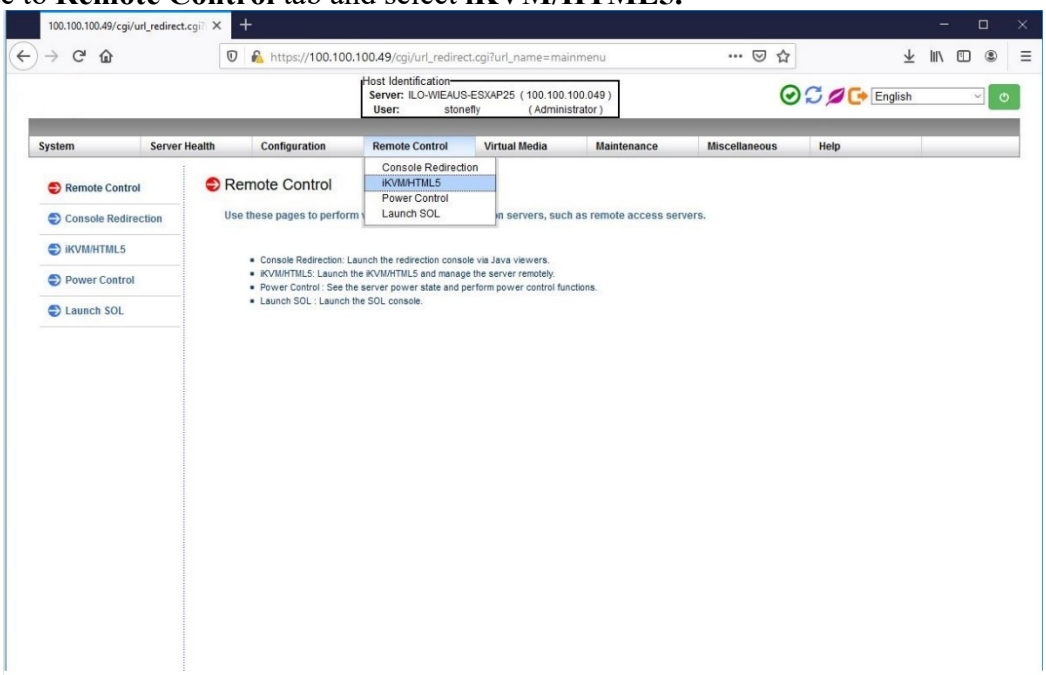

Click on **iKVM/HTML5** to launch remote console:

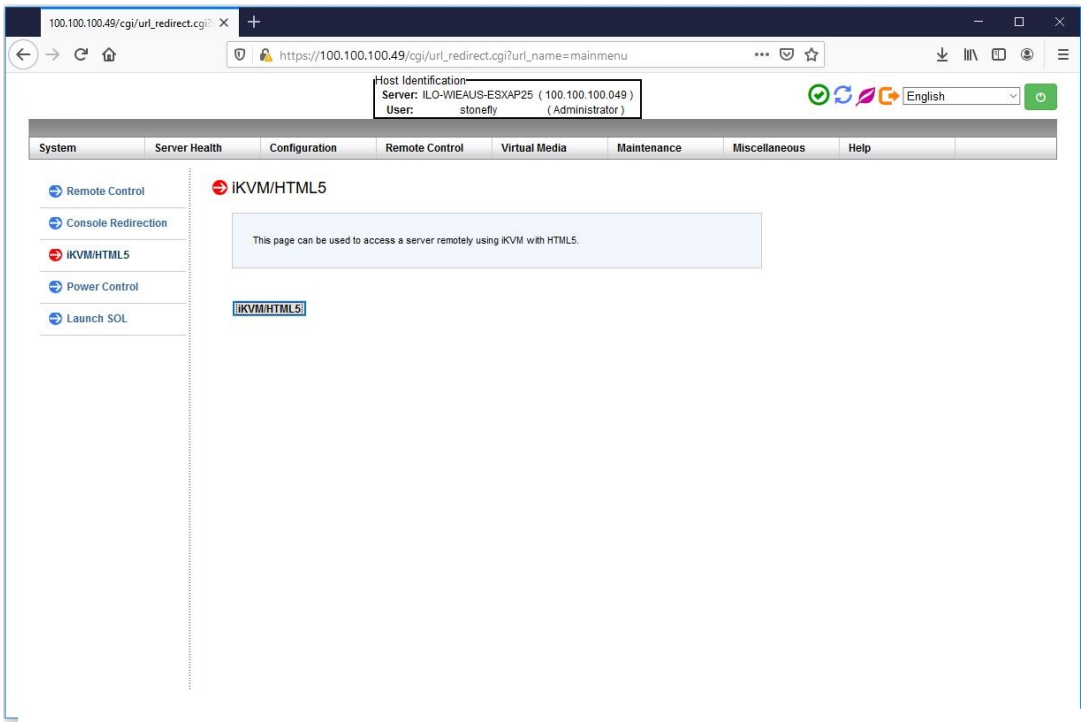

© StoneFly Inc. | All rights reserved

The console screen will appear as shown above.

3.1.6 Configuring the Network Settings for the ISC Management Port

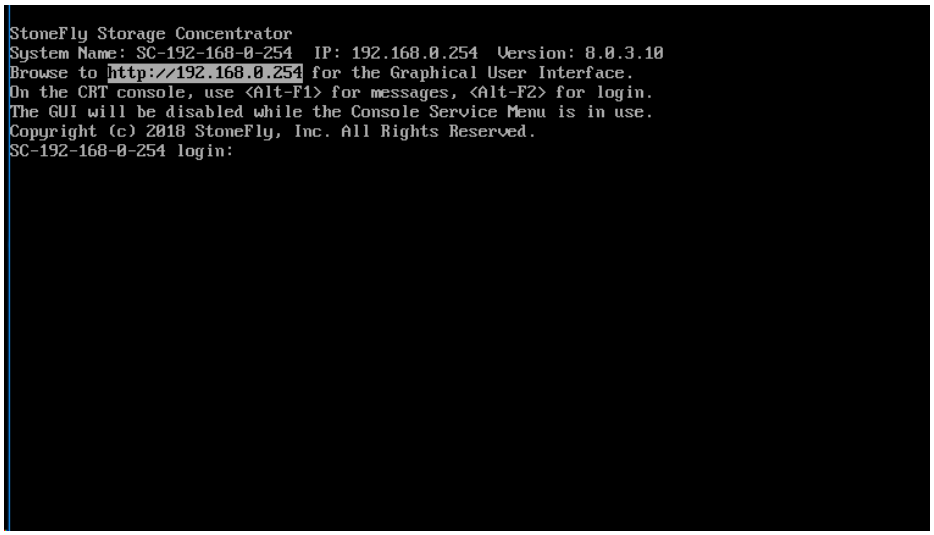

The ISC Management port is preconfigured with the default IP address of 192.168.0.254. This must be changed to a valid IP address for your LAN network. Using the remote console you loaded in the previous section:

Press **Enter** to display the login prompt.

At the User ID prompt type **console** and hit **Enter.**

At the password prompt type **coni100o** and hit **Enter.** Note that the User ID and password are case sensitive.

Using the Storage Concentrator Service menu, enter **2** to select **Network.**

 © StoneFly Inc. | All rights reserved

```
System Name: SC-192-168-0-254 IP: 192.168.0.254 Version: 8.0.3.10

Storage Concentrator

Service
----------------
1- Admin.....
2- Network...
q- Logout

-> _
```

The current network configuration settings will appear as shown below:

```
System Name: SC-192-168-0-254 IP: 192.168.0.254 Version: 8.0.3.7

Storage Concentrator

Service->Network
----------------
1- Default Gateway (192.168.0.254)
2- Management IP Address (192.168.0.254)
3- Management Netmask (255.255.255.0)
4- Management Network (192.168.0.0)
5- Management Broadcast (192.168.0.255)
6- Management Use DHCP (No)
7- Primary DNS Server ()
8- Secondary DNS Server ()
s- Save Changes

q- Back to Service...

->
```

Configure all of the network settings to those appropriate for your LAN network by selecting each of the numbered fields. When finished, enter **s** key to **Save Changes**, then completely exit the CLI using the **q** key for **Logout.** The login prompt should reappear.

Browser access to the ISC management GUI is blocked while the CLI menu is active. Also note that there can be a short delay before the web GUI becomes available once the CLI is closed.

At this point, it should be possible to login to the web GUI for the StoneFly ISC appliance by browing to the management IP address that you just configured in the last step. Once logged in, you should configure the SAN data network settings.

© StoneFly Inc. | All rights reserved

3.1.7 StoneFusion™ Software Configuration

StoneFly ISC comes pre-installed with StoneFly's Software Defined Storage (SDS) solution: StoneFusion. This section describes the configuration process for the StoneFusion software.

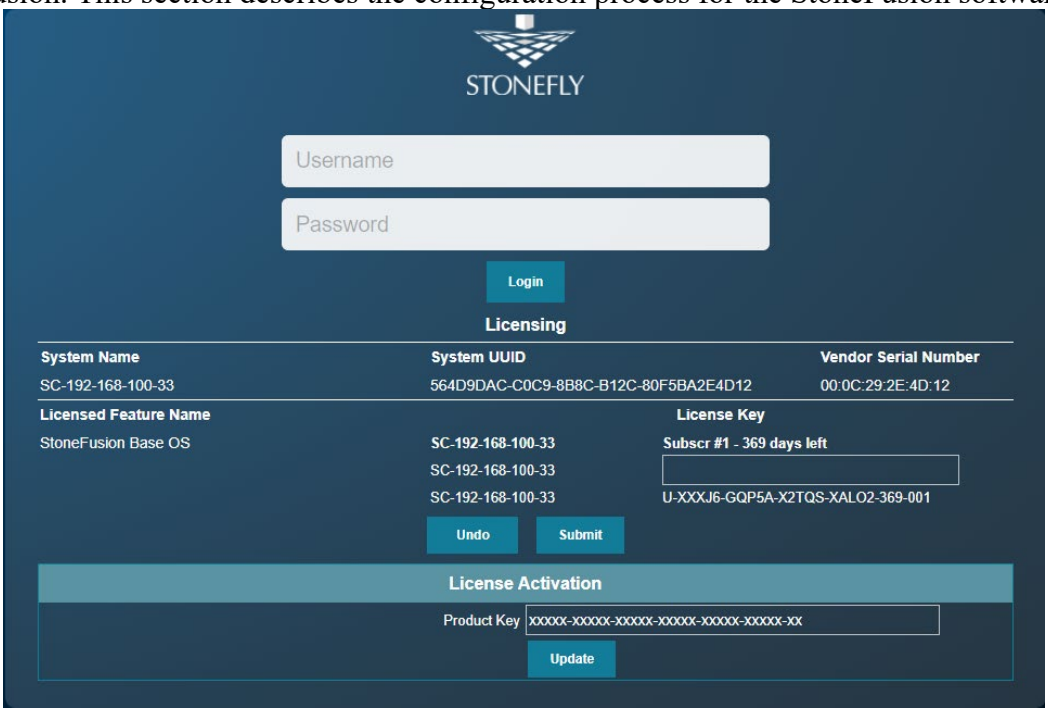

Figure 13: StoneFusion Login Screen

In the User ID field type: **admin**

In the Password field type: **M@n4g1ng**

Click **Submit**. The Home Page screen will appear.

Click **System**.

Click **Admin**.

Click **Auto Save**. The Auto Save screen will appear.

© StoneFly Inc. | All rights reserved

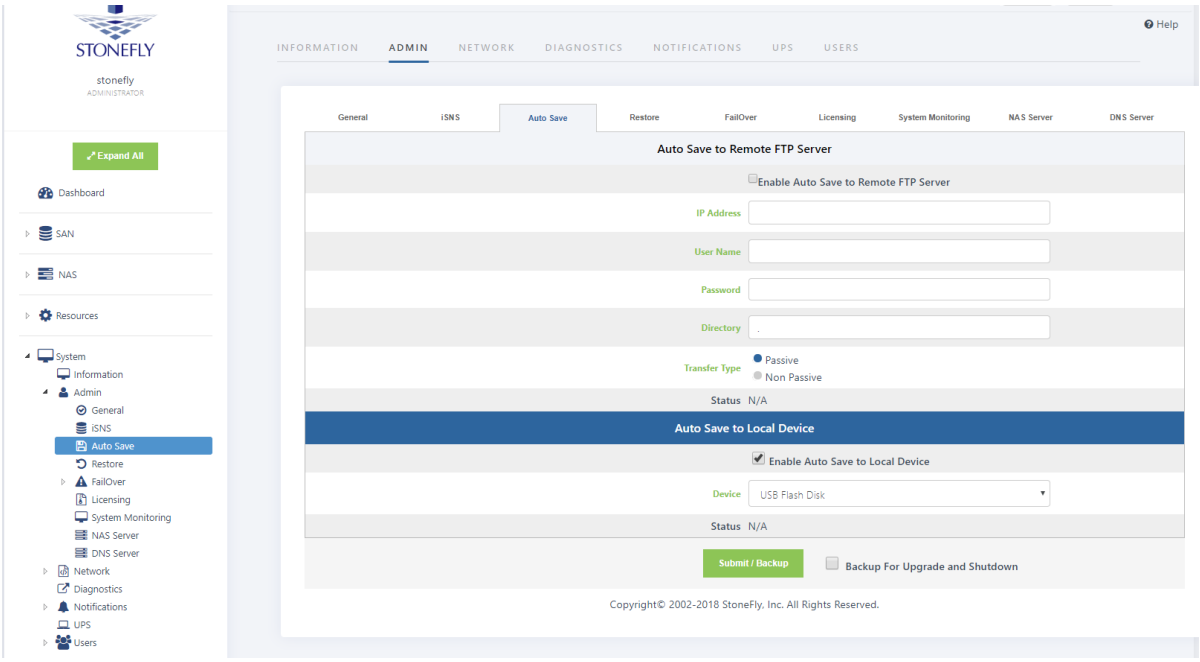

Figure 14: StoneFusion Auto Save Screen

Select method(s) of saving the database. A USB Flash drive must be inserted into the USB port prior to Enabling. Checkmark **Enable Auto Save to Local Device** and select **USB Flash Disk** from the dropdown. Click **Submit**. For **Auto Save to Remote FTP Server** create a directory for each Storage Concentrator. Fill in the IP Address, User Name, Password and directory. Select **Passive** or **Non Passive** and click **Submit**. Both methods can be used, but at least one should be configured to ensure recovery if needed.

Navigate to **Admin > General**. The System Admin screen will appear.

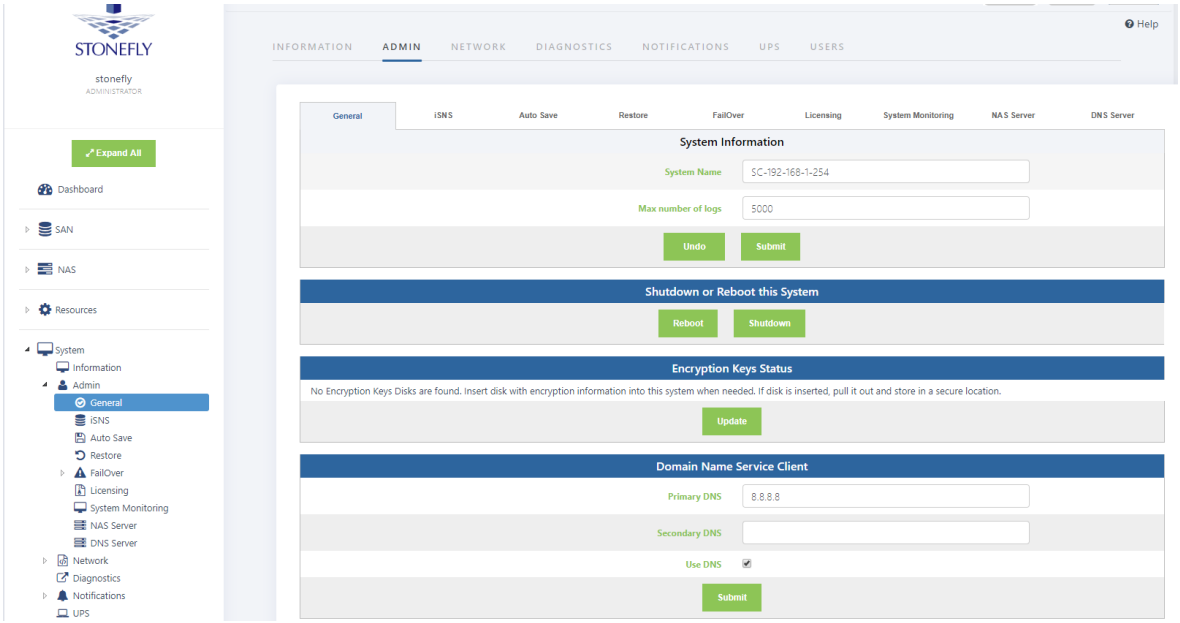

Figure 15: StoneFusion Admin Screen

© StoneFly Inc. | All rights reserved

Enter a system name for the *ISC*.

Enter the number of log records for the database in the **Max number of logs** field.

The default number of log records is 2000, which is sufficient for most installations.

Click **Submit**.

Navigate to **Network > Data Port**. The Local iSCSI Data Port Settings screen appears with the current system (factory) settings. Most fields are blank.

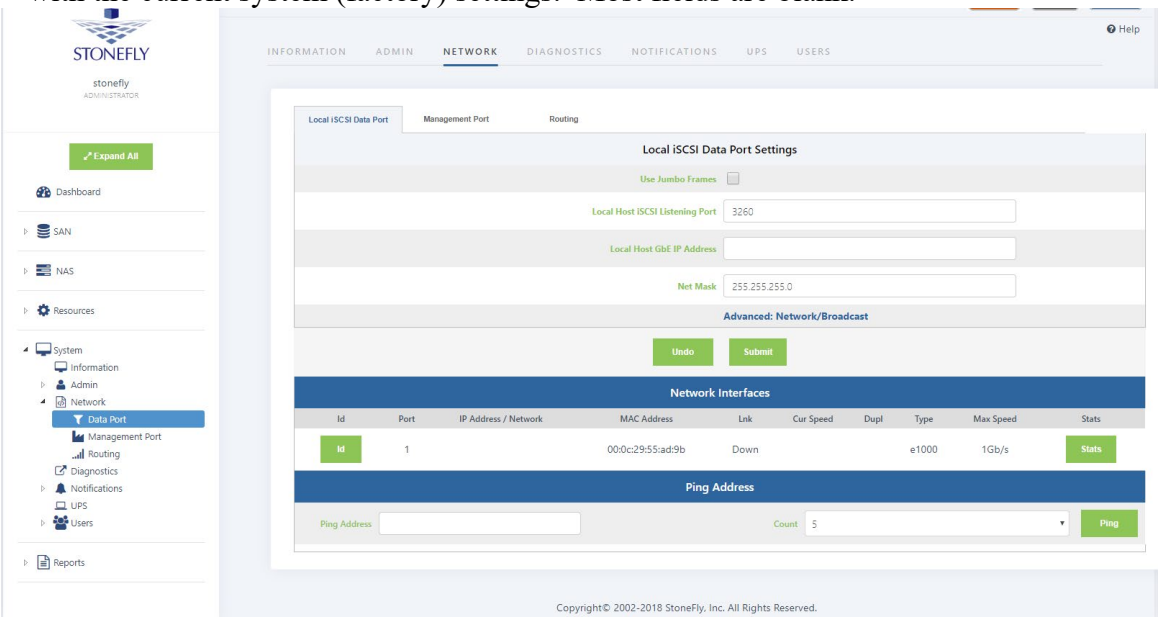

Figure 16: StoneFusion Local iSCSI Data Port Settings Screen

Enter the **IP Address** for the Local iSCSI Data Port.

Enter the **NetMask** setting for the Local iSCSI Data Port.

Click **Submit**.

Click **OK** to continue when the confirmation dialog box appears. The *ISC* automatically configures the Network and Broadcast settings based on the IP address and Netmask settings. Click on the **Advanced: Network/Broadcast** link to view or modify the Network and Broadcast settings. For more information, see "Chapter 2: Administrative Interface" in the *Storage Concentrator User's Guide*.

Review the status of all SAN Network Interfaces to select which ports will be used. It is not necessary to select all available ports. All ports selected must have cables attached to them to maintain the proper cluster configuration and operation. The **Id** button is used to flash the link light on a specific port. Select a port by clicking on the box in the **Bond** column. Changes are not enforced until the next reboot. At first power up a default configuration is presented. Changing the default settings requires a reboot of the Storage Concentrator. Navigate to the **System > Admin > General** screen and click on **Reboot**. If

 © StoneFly Inc. | All rights reserved

no changes are desired continue to the next step to configure the Management Port.

Click on **Management Port**. The Management Port Settings screen appears.

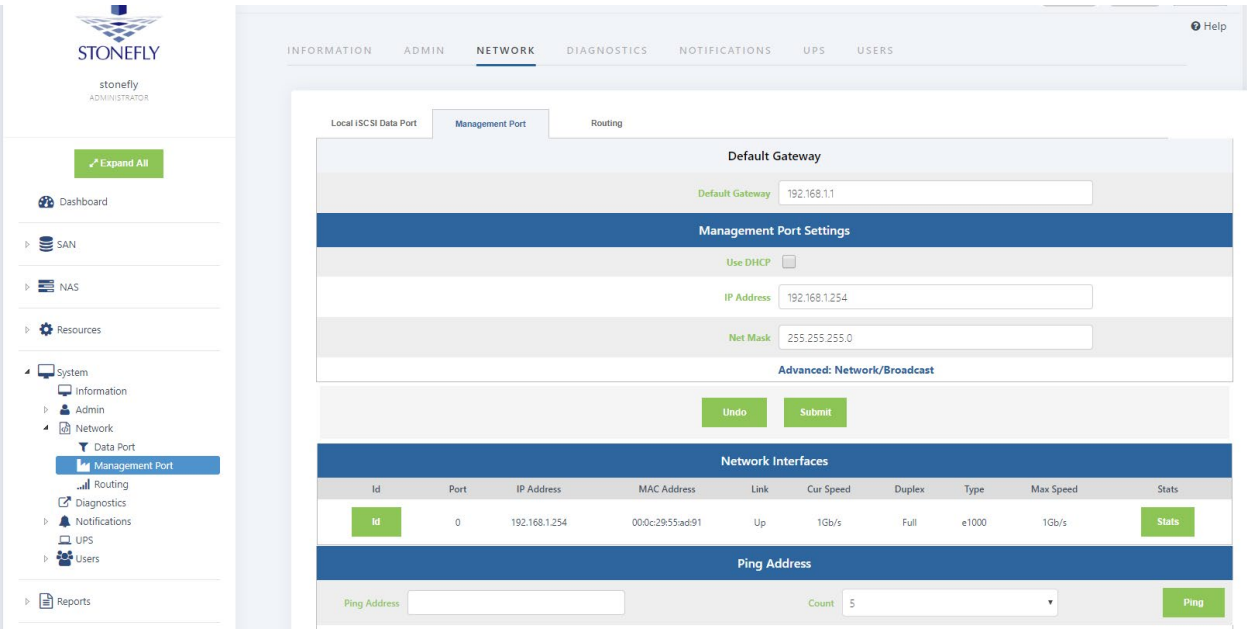

Figure 17: StoneFusion Management Port Settings Screen

Enter the **Default Gateway** setting.

Enter the **IP Address** for the Management port.

Enter the **NetMask** setting for the Management port. It is not necessary to select a Management Port as on the Local iSCSI Port screen. There is only one port assigned for this purpose.

The *ISC* automatically configures the Network and Broadcast settings based on the IP address and Netmask settings. Click on the **Advanced: Network/Broadcast** link to view or modify the Network and Broadcast settings. For more information refer to "Chapter 2: Administrative Interface" in the Storage Concentrator User's Guide.

Click **Submit**. The following popups will appear.

Changing the IP address of the Management port will cause your browser to lose its connection to the ISC. To access the *ISC*, set your browser's URL to point to the new IP address.

Depending on the speed of your browser connection, you may not see this screen. Your changes will still take effect, however you will need to manually set your browser's URL to point to the new IP address.

© StoneFly Inc. | All rights reserved

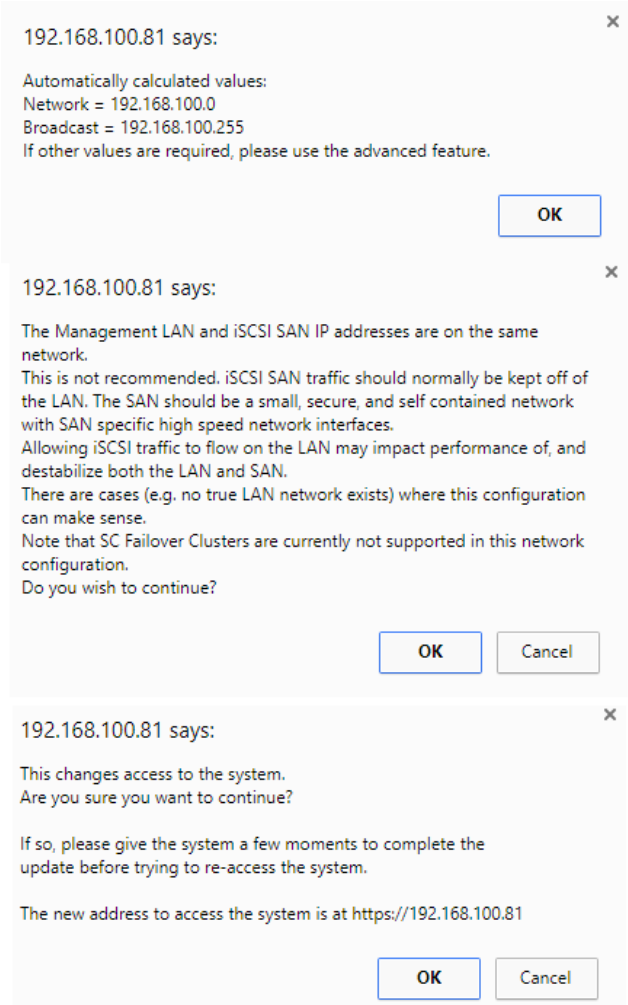

Figure 18: System Management GbE Port Change Screen

Click on **Ok** to continue.

Click on the new IP address to confirm the change to the Management Port setting.

3.1.8 Setting up Routing

To access a host on other networks, routing information to those networks must be configured in the System Management Network Routing screen. A route must be added if the host has a network setting that is different from the one listed in the iSCSI Host GbE Port Settings screen. For example, if the *ISC* network setting is 26.34.128.50 and the host network setting is 106.39.212.6, a route to the host must be configured.

© StoneFly Inc. | All rights reserved

To configure the routing information, use the steps that follow:

1. Navigate to **System > Network > Routing**. The Routing screen will appear.

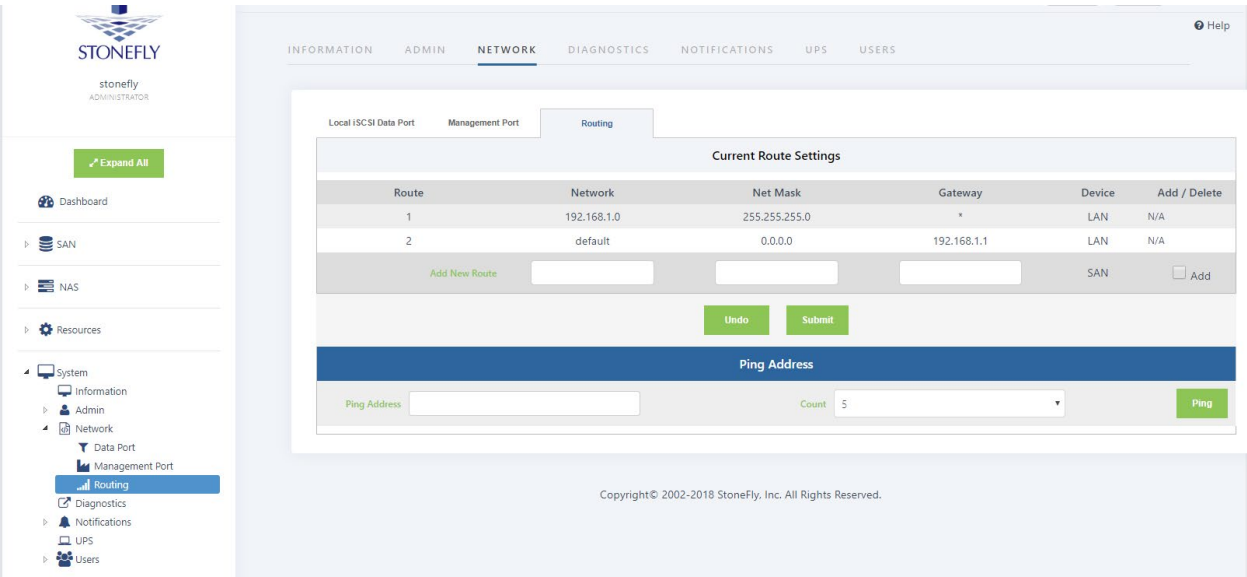

Figure 19: StoneFusion Management Network Routing Screen

2. In the **Add New Route** fields, enter the **Network**, **Netmask**, and **Gateway** settings for the new route.
3. Click the **Add** check box.
4. Click **Submit**.
5. Navigate to **Admin > General**. The System Admin screen will appear. The *ISC* must be rebooted for the new routing settings to be recognized.
6. Click **Reboot**.

3.1.9 Confirming Setup

It is important to confirm that the ISC is configured properly to communicate on your network before completing the configuration process covered in the "Administrative Interface" chapter of the Storage Concentrator User's Guide.

To confirm that the ISC is configured properly, do the following:

1. Launch your web browser. In the URL address field, type the IP address you set up for the Management GbE port during the configuration process. Be sure to include https:// in the address.

The browser will display an alert regarding the security certificate for the site. This occurs because the IP address for the *ISC* was changed from the factory default to one appropriate for your network.

2. Follow the screen prompts to accept the certificate. The number of screens will vary depending on which browser you are using. When the security certificate is accepted, the

 © StoneFly Inc. | All rights reserved

ISC administrative interface login screen will appear.

If the administrative interface login screen does not appear, repeat the steps listed in "Configuring the Network Settings" on page 19.

3. Click **System** and then **Network** to confirm the network settings.
4. Click **Data Port** and confirm the settings.
5. Click **Management Port** and confirm the settings.
6. Click **Routing** and confirm the settings.

3.1.10 Steps to Complete Before Setting Up the System

3.1 Read the Release Notes thoroughly. These can be found in your documentation CD.

3.2 Verify that your Host Initiators are at the most current revision levels. For example, if you are using the Microsoft Windows iSCSI Initiator, obtain the latest version from Microsoft.

3.3 Refer to Appendix 7: System Considerations in the Storage Concentrator User's Guide and make sure that you set up your servers according to the instructions in that section before connecting or using your StoneFly ISC Appliance.

CAUTION: Not setting up your systems according to those instructions will cause timeouts and SAN disconnections.

3.1.11 Attaching and Removing the Front Bezel

Follow the below steps when attaching or removing the front bezel of the StoneFly ISC:

- Attach the front bezel after initial installation is completed. This will help prevent damage to the drives during everyday use. The cover snaps on and off easily and can be removed as needed.
- To install the cover, gently press to snap the cover into place.
- To remove the cover, gently pull the cover towards you to remove it from the front panel.

© StoneFly Inc. | All rights reserved

Chapter-4: Troubleshooting

© StoneFly Inc. | All rights reserved

Refer to the following table for helpful hints on solving some of the most common problems. If you cannot find a resolution to your problem here, contact StoneFly. Call 510.265.1616 and select support from the menu.

Problem	Possible cause	Solution
The *ISC* administrative interface is not accessible from the computer.	The computer is not on the network.	Ensure that the computer is running a supported browser and is on the same network or subnet as the *ISC*.
	An incorrect IP address was typed in the address line of the browser.	Try the following: • Verify and retype the IP address in the browser. • Make sure the IP address begins with **https**. The IP address does not begin with http.
	Incorrect network settings were entered during installation.	For the correct settings, see "Configuring the Network Settings" on page 18.
	The network cable is not properly connected to the computer or the *ISC*.	Try the following: • Check all network cable connections. • Make sure the network cable is not damaged.
The *ISC* cannot be configured using the factory- supplied IP address.	The cable is not a network crossover cable.	Use a network crossover cable.
	The network crossover cable is plugged into the incorrect port on the back of the *ISC*.	Plug the network crossover cable into the Management Gigabit Ethernet (GbE) port on the back of the *ISC*. See, "Configuring the Network Settings" on page 18.
	The computer is not configured to communicate in the 192.168.0.0 network.	Configure the computer to communicate in the 192.168.0.0 network.

© StoneFly Inc. | All rights reserved

The unit is beeping	-	Make sure that all the cables, specially the power cables are connected. Check to see if any of the disk drives has failed. Check to see if a power supply has failed.
When I power the system on, I get a message "No Operating system found". What should I do?	-	Navigate to the BIOS settings and set your OS disk as first boot device. If it still does not work, contact StoneFly Support.

To access the administrative interface, use the steps that follow:

1. Launch your web browser.
2. Type the IP address for the Management Port of the *Storage Concentrator* in the address field of the browser.

The address field in the browser must include https:// to access the administrative interface.

© StoneFly Inc. | All rights reserved

This Page is intentionally left blank.

© StoneFly Inc. | All rights reserved

Appendix-1: Glossary

© StoneFly Inc. | All rights reserved

Access Control List (ACL)

A list that controls which hosts have access to which volumes. When a host attempts to log in, the *Storage Concentrator* requests authorization and allows access based on the list.

Access Path

The route used by a computer to communicate with a storage device. The path accesses the host bus adapter, host storage interconnection controller and logical unit. Some configurations support multiple access paths to a single device.

Administrative Interface

The graphical administrative interface is accessed from a computer on the network via a web browser. The following functions are available through the interface: *Storage Concentrator* discovery, physical resource management, storage pool management, logical volume management, target management, Access Control List management (ACL), system management, session management.

Adaptive Load Balancing

A feature that allows for more than one networking path providing port FailOver protection, as well as increased bandwidth. If one port goes down, the other port automatically accepts the additional load. There is no interruption in server operation, and a network alert is generated to inform IT staff of the problem.

Application Programming Interface (API)

The interface used by an application program to request services; usually denotes interfaces between applications and the software components that comprise the operating environment (e.g., operating system, file system, volume manager, and device drivers).

Array or Array Configuration

A storage array, i.e., a disk array or RAID array.

1. Assignment of the disks and operating parameters for a disk array. Disk array configuration includes designating the member disks or extents of the array and the order in which they are to be used, as well as setting parameters such as stripe depth, RAID model, cache allowance, spare disk assignments.

2. The arrangement of disks and operating parameters that result from such an assignment.

Asynchronous I/O Operation

An I/O operation whose initiator does not await its completion before proceeding with other work. Asynchronous I/O operations enable an initiator to have multiple concurrent I/O

 © StoneFly Inc. | All rights reserved

operations in progress.

Asynchronous Mirroring

Transactions that maintain synchronization for logical volumes occur in a batch rather than real-time mode. An asynchronous mirroring is desired when mirrored logical volumes are separated by distance in order to reduce the effects of distance-induced latency. It is also desirable to use Asynchronous Mirroring or replication to reduce the bandwidth requirements of the network connection.

Backup

1. (noun) A collection of data stored on non-volatile (usually removable) storage media for purposes of recovery in case the original copy of data is lost or becomes inaccessible. The data is also called the backup copy. To be useful for recovery, a backup must be made by copying the source data image when it is in a consistent state.

2. (verb) The act of creating a backup.

Campus Mirrors

Mirror images that are behind the Secondary *Storage Concentrator*

CHAP

CHAP (Challenge Handshake Authentication Protocol) allows you to set a Password or "Secret" for as a gatekeeper for communication between a host initiator and a volume.

Clusters

You must have at least two *Storage Concentrators* to implement FailOver on an IP Storage. Multiple *Storage Concentrators* are known as a cluster. In a clustered pair there will be one Primary and one Secondary *Storage Concentrator*. A cluster appears as a single entity to hosts on the network.

Concatenation

A logical joining of two series of data, usually represented by the symbol "|". In data communications, two or more data are often concatenated to provide a unique name or reference (e.g., S_ID | X_ID). Volume managers concatenate disk address spaces to present a single larger address space.

Configuration

1. The process of installing or removing hardware or software components required for a system or subsystem to function.
2. Assignment of the operating parameters of a system, subsystem, or device. For example, disk array configuration includes designating the member disks or extents

 © StoneFly Inc. | All rights reserved

for the array, as well as setting parameters such as stripe depth, RAID model, and cache allowance.

3. The collection of hardware and software components and operating parameters for an operating system.

Controller

The control logic in a storage subsystem that performs command transformation and routing, aggregation (RAID, mirroring, striping, or other aggregation), high-level error recovery, and performance optimization for multiple storage devices.

Controller-based Array

A disk array whose control software executes in a disk subsystem controller. The member disks of a controller-based array are necessarily part of the same disk subsystem that includes the controller.

Database Management System (DBMS)

A set of computer programs with a user and/or programming interface that supports defining the format of a database, and creating and accessing the data. A database management system removes the need for a user or program to manage low-level database storage. It also provides security and assures the integrity of the data it contains. Database management systems may be relational (table-oriented) or object-oriented.

Data Transfer Rate

The amount of data per unit time moved across an I/O bus while executing an I/O load. For any I/O load, the data transfer capacity of an I/O subsystem is limited by its data transfer rate. For disk subsystem I/O, data transfer rate is usually expressed in MB/second (millions of bytes per second where 1 million is 10^6).

Detach Image

Detaching an image allows it to be mounted and used by other software applications. The most common usage is to make a backup copy of the detached image. The detached image retains the mirror volume information and can be rejoined at any time.

Disk Array

A set of disks from one or more commonly accessible disk subsystems, combined with a body of control software. The control software presents the storage capacity of the disk to hosts as one or more logical disks. When it runs on a disk controller, control software is often called firmware or microcode. Control software that runs on a host computer is usually

 © StoneFly Inc. | All rights reserved

called a volume manager.

A disk subsystem which includes control software with the capability to organize disks as disk arrays.

Disk Array Subsystem Disk Drive

A non-volatile, randomly addressable, writable data storage device. Subdivision of a disk drive, disk array, or RAID array.

Disk Partitions Distributed Lock Manager (DLM)

Software, hardware or a combination of hardware and software that prevents multiple writers from altering a data element simultaneously or in a fashion that would lead to data corruption.

Failed Over

A mode of operation for failure-tolerant systems in which a component has failed and its function has been assumed by a redundant component. A system operating in a failed-over mode that protects against single failures is not failure tolerant, since a failure of the redundant component may render the system unable to function. Some systems (e.g., clusters) are able to tolerate more than one failure; these remain failure tolerant until no redundant component is available to protect against further failures.

FailOver

The automatic substitution of a functionally equivalent system component for a failed one. FailOver automatically redirects user requests from the failed or down system to the backup system that takes over the operations of the primary system.

File Server

A computer whose primary purpose is to serve files to clients. A file server is a general-purpose computer capable of hosting additional applications or capable of only serving files. The server is also called a host.

File System

Software that imposes structure on the address space of one or more physical or logical disks so that applications may deal more conveniently with abstract-named data objects of variable size (files). File systems are often supplied as operating system components but are implemented and marketed as independent software components.

Graphical User Interface (GUI)

A user interface for intelligent devices that is characterized by pictorial displays and highly

 © StoneFly Inc. | All rights reserved

structured forms-oriented input.

Hardware-based

Functionality implemented in high-speed physical (digital) hardware components, such as logic gates, inside high-density field- programmable gate arrays (FPGAs) or application-specific integrated circuits (ASICs).

Host

A computer connected to storage; typically a server running applications or providing services that access and consume storage.

Host Bus Adapter (HBA)

An I/O adapter that connects a host I/O bus to the memory system of a computer.

Image

See Mirror Image.

Input/Output (I/O)

The process of moving data between the main memory of a computer system and an external device or interface such as a storage device, display, printer, or network connected to other computer systems. I/O is a collective term for reading or moving data into a computer system's memory, and writing, or moving data from a computer system's memory to another location.

Initiator

SCSI device (usually a host system) that requests an operation to be performed by another SCSI device, the target.

IOPS

Input/Output Per Second. It is the number of inputs and outputs or read/writes per second.

iSCSI

iSCSI is a protocol that enables the transmission of block-level SCSI data between storage devices and computers over a standard IP network. iSCSI combines Ethernet-based IP networking with the SCSI command set, the core command set used in all storage configurations.

iSCSI Client

© StoneFly Inc. | All rights reserved

A logical entity, typically a host, which includes at least one iSCSI Initiator.

iSCSI Initiator

A logical entity, typically within a host, that sends (iSCSI) SCSI commands to targets to be executed.

iSCSI Server

A logical entity, typically a storage controller or gateway, which includes at least one iSCSI Target.

iSCSI Target

A group of physical storage devices containing at least 1 Logical Unit Number (LUN).

iSNS

iSNS (Internet Storage Naming Service) is a discovery protocol that facilitates automated discovery, management and configuration of iSCSI devices on a TCP/IP network. In any storage network, hosts (initiators) need to know which storage resources (or targets) they can access. An Internet storage name server lets servers automatically identify and connect to authorized storage resources.

JBOD

Acronym for "Just a Bunch Of Disks." Originally used to mean a collection of disks without the coordinated control provided by control software; today the term JBOD most often refers to a cabinet of disks whether or not RAID functionality is present.

Live Volume

The volume that is being accessed by the host for normal operations. The data on this volume is complete and not accessed via pointers and/or data structures. The difference between a regular volume and a Live Volume is that the Live Volume has been Snapshot enabled.

Logical Device

A device presented to an operating environment by control software or by a volume manager. From an application standpoint, a logical device is equivalent to a physical one. In some implementations, logical devices may differ from physical ones at the operating system level (e.g., booting from a host-based disk array may not be possible).

Logical Partition Logical Unit

A logical partition is a segmentation of a logical volume.

Logical Unit Number (LUN)

© StoneFly Inc. | All rights reserved

The entity within a SCSI target that executes I/O commands. SCSI I/O commands are sent to a target and executed by a logical unit within that target. A SCSI physical disk typically has a single logical unit. Tape drives and array controllers may incorporate multiple logical units to which I/O commands can be addressed. Each logical unit exported by an array controller corresponds to a logical disk. (Common practice uses the terms “Logical Unit” and “LUN” interchangeably, although this is not strictly correct).

A SCSI representation of a system drive on a given channel and target ID. An encoded three-bit identifier for the logical unit.

Logical Volume

An arbitrary-sized space in a volume group that can be used as an address space for a file system or as device swap space. Logical volumes behave like disk block devices, except that, unlike physical disk partitions, they can be dynamically grown, shrunk and moved about without rebooting an operating system or entering into a maintenance or stand-alone mode.

LUN Zoning

In Fibre Channel, several devices grouped by function or by location. All devices connected to a connectivity product may include configuration of one or more zones. Devices in the same zone can see each other; devices in different zones cannot. A fabric management service used to create logical device subsets within a Storage Area Network (SAN).

Mapping

Conversion between two data addressing spaces. For example, mapping refers to the conversion between physical disk block addresses and the block addresses of the logical disks presented to operating environments by control software.

Management Information Base (MIB)

In SNMP, a collection of data elements that define the device settings the *Storage Concentrator* can control and the information it can retrieve it from a storage device.

Local Mirrors

Mirrored images that are located behind the Primary Storage Concentrator.

Metadata

Data that describes data. In disk arrays, meta-data consists of items such as array membership, member extent sizes and locations, descriptions of logical disks and partitions, and array state information. In file systems, meta-data includes file names, file properties and security information, and lists of block addresses at which each file’s data is stored.

Mirroring

 © StoneFly Inc. | All rights reserved

StoneFly Replicator™ software provides storage-independent replication that operates at the block level over an iSCSI network. Replicator supports local and remote replication and can operate synchronously or asynchronously.

StoneFly Mirroring™ synchronous mirroring feature supplies host-independent mirrored data storage that duplicates production data onto physically separate mirrored target images transparently to users, applications, databases, and host processors. Synchronous mirroring implies that the *Storage Concentrator* waits for a write-complete acknowledgment from all volumes before presenting a write completion status to the host.

Mirror Image

A mirror image contains an exact duplicate of all other images in a mirror volume. A mirror image is grouped with other mirror images to comprise a mirror volume (each mirror image contains a duplicate copy of the data). Mirror images can be either local mirrors or they can be campus mirrors. The size of the mirror image must be equal to the size of all other images in the mirror volume.

Mirror Volume

A Mirror Volume is composed of multiple mirror images. StoneFly Mirroring supports up to four mirror images in a mirror volume. The Mirror Volume is what the applications and hosts see as the storage device.

Mount Directory

Directory in any file system where the top directory of a descendent file system is mounted. The contents of the mount directory are the contents of the top directory in the mounted file system. If the mount directory is not empty before the file system is mounted, any existing files and directories in that directory as well as any descendent directories become invisible (and inaccessible) until the file system is unmounted.

Mount Point

Synonym for mount directory. The mount point is the location (directory) where a file system, known to the host system, is mounted. Usually defined in terms of which system the file system is mounted on and where on that system the file system is mounted.

Network Attached Storage (NAS)

A term used to refer to storage elements that connect to a network and provide file access services to computer systems. Abbreviated NAS. A NAS Storage Element consists of an engine, which implements the file services, and one or more devices, on which data is stored. NAS elements may be attached to any type of network. A class of systems that provide file services to host computers. A host system that uses network attached storage uses a file system device driver to access data using file access protocols such as NFS or CIFS. NAS systems interpret these commands and perform the internal file and device I/O

 © StoneFly Inc. | All rights reserved

operations necessary to execute them.

Network File System

In NAS, a distributed file system and its associated network protocol originally developed by Sun Microsystems Computer Corporation and commonly implemented in UNIX systems, although most other computer systems have implemented NFS clients and/or servers. Abbreviated NFS. The IETF is responsible for the NFS standard.

Partition

1. Subdivision of the capacity of a physical or logical disk. Partitions are consecutively numbered ranges of blocks that are recognized by MS-DOS, Windows, and most UNIX operating systems.
2. Synonym for the type of extent used to configure arrays.
3. A contiguously addressed range of logical blocks on a physical media that is identifiable by an operating system via the partition's type and subtype fields. A partition's type and subtype fields are recorded on the physical media and hence make the partition self-identifying.

Primary Storage Concentrator

The *Storage Concentrator* that manages the mirror volume.

Promote Image

Promoting a mirror image makes it a stand-alone volume. The promoted volume does not retain any mirrored volume information but contains an exact copy of the data at the time of promotion. The new stand-alone volume is accessible to the hosts and can retain security information from the mirror volume.

Partitioning

Presentation of the usable storage capacity of a disk or array to an operating environment in the form of several logical disks whose aggregate capacity approximates that of the underlying physical or logical disk. Partitioning is common in MS-DOS, Windows, and UNIX environments. Partitioning is useful with hosts that cannot support the full capacity of a large disk or array as one device. It can also be useful administratively, for example, to create hard subdivisions of a large logical disk.

Path

The access path from a host computer to a storage device.

© StoneFly Inc. | All rights reserved

Physical Extent

A unit of storage space on a physical device containing a specific amount of storage space. A collection of physical extents is then managed by the StoneFly Volume Manager as a logical volume, and a group of logical volumes make up a volume group. Physical extents are the smallest manageable element in a logical volume that can be managed by the StoneFly Volume Manager. The kernel and file system then use standard disk or file-system blocks when writing or reading to and from.

Physical Volume

A physical device such as a disk drive or RAID sub-system that, usually together with other devices, is configured as a volume group for subsequent division into one or more logical volumes. Logical volumes can be of arbitrary size (in multiples of physical extent size), whereas the physical volume is defined by the physical storage boundaries of the actual recording media or recording surface area in the device.

Primary Storage Concentrator

A Primary *Storage Concentrator* is the *Storage Concentrator* in a cluster that has an active Web server for the Administrative Interface. The Primary *Storage Concentrator* configures the volumes and back-end sessions on the Secondary *Storage Concentrator(s)* within the cluster.

Port

An I/O adapter used to connect an intelligent device (node) to an I/O bus or network storage subsystems. Port is the synonym for the head end of a device I/O bus containing the arbitration logic.

Provisioning

The logical volume management services provided by the *Storage Concentrator* system create a centrally administered SAN infrastructure ideally suited for provisioning enterprise or departmental SAN, over an IP network.

Storage provisioning is the process of presenting a uniform and logical representation of physical storage resources transparent to the consumers of the storage (applications and users). Storage provisioning is not restricted by the type of storage, server platform or connection methodology. Storage provisioning dynamically maps data from the logical storage space required by applications to the actual physical storage space.

RAID

RAID is an acronym for Redundant Array of Independent Disks, a Firmware/hardware implementation of a disk array controller in which data is stored on disks in such a manner

 © StoneFly Inc. | All rights reserved

as to improve performance and avoid data loss in the presence of a disk failure.

Raw Device / Raw Partition

A disk partition not managed by a volume manager. The term raw partition is frequently encountered when discussing database systems because some database system vendors recommend volumes or files for underlying database storage, while others recommend direct storage on raw partitions.

Reattach Image

A previously detached mirror image can be reattached to the original mirror volume. Reattaching a mirror image removes it as a stand-alone image volume and initiates a rebuild operation on the reattached image.

Rebuild

The process of creating a mirror image from an existing volume. The volume is duplicated onto the mirror image at the block level in its entirety.

Relational Database Management System (RDBMS)

An RDBMS is a type of database management system that stores data in the form of related tables. Relational databases are powerful because they require few assumptions about how data is related or how it will be extracted from the database. As a result, the same database can be viewed in many different ways.

An important feature of relational systems is that a single database can be spread across several tables

Resource (Physical Device)

A disk drive, RAID (Redundant Array of Independent Disks) subsystem or other mass storage device and the data–storing media it contains. Sometimes referred to as a physical volume.

Revert Mirror to Span

Reverting a Mirror to a Span converts the mirror volume to a regular spanned volume.

Rollback

In Snapshot, rollback is a disaster recovery feature that allows users to return to the last known “good” data point in the event of corruption, viruses, or lost files. Essentially, performing a rollback returns the Live Volume to the last good known state.

Scalability

Capable of being changed in size and configuration. It typically refers to a computer,

 © StoneFly Inc. | All rights reserved

product or system's ability to expand.

Secondary Servers

A server attached to the Secondary *Storage Concentrator* has access to campus mirror images, however, it views them as a local virtual volume. A server attached to the Secondary *Storage Concentrator* can also have its own local mirror volumes. These volumes are accessible as campus mirrors from the Primary *Storage Concentrator*.

Secondary Storage Concentrator

Another *Storage Concentrator* in a campus configuration that presents mirror images to the primary *Storage Concentrator*. Either the Primary *Storage Concentrator* or the Secondary *Storage Concentrator* or both can be single units or FailOver clusters.

SES

SES is an acronym for SCSI-3 Enclosure Services. Provides a means of SCSI access to multiple devices within an enclosure.

Simple Network Management Protocol (SNMP)

SNMP is an IETF protocol for monitoring and managing systems and devices in a network. The data being monitored and managed is defined by a MIB. The functions supported by the protocol are the request and retrieval of data, the setting or writing of data, and traps that signal the occurrence of events.

Small Computer Storage Interface (SCSI)

SCSI is a collection of ANSI standards and proposed standards that define I/O buses primarily intended for connecting storage subsystems or devices to hosts through host bus adapters. Originally intended primarily for use with small (desktop workstation) computers, SCSI has been extended to serve most computing needs, and is arguably the most widely implemented I/O bus in use today.

Snapshot

A point-in-time copy of a Live Volume. Snapshots contain an image of the volume at the exact point in time that the snapshot was taken. Snapshots can be created nearly instantaneously. The snapshot volume appears to the host as if it was a regular logical volume.

Snapshot Fragmentation/ Total Fragmentation for All Volumes

These percentages represent the amount of the index table fragmentation on the volume selected as well as the total amount of fragmentation for all Snapshot volumes. These percentages have no relationship to disk fragmentation.

 © StoneFly Inc. | All rights reserved

Snapshot Volume

A Snapshot Volume is a virtual volume that represents a point-in-time image of a Live Volume. The Snapshot Volume data is a combination of data from the Live Volume and data from the Snapspace.

Snapspace

Snapspace is storage space configured by the Storage Concentrator used to store the changed data for maintaining snapshots. This data space is not directly readable by hosts. For fault tolerance, the Snapspace can be mirrored.

Source

A place from which data is taken. The place from which the data is acquired is called the *source*, whereas the place it is sent to or moved to is called the destination or target.

Spanning

A volume that is created comprised of regions or sections of several physical devices.

Secondary Storage Concentrator

A Secondary Storage Concentrator is a redundant Storage Concentrator that can be assigned volumes and accept sessions from hosts for those volumes. The Secondary Storage Concentrator in the cluster will transparently (to the hosts) become the Primary Storage Concentrator in the event of a failure in the Primary Storage Concentrator. The original Primary Storage Concentrator's storage volumes are now managed by the new Primary Storage Concentrator.

Storage Area Network (SAN)

A storage area network (SAN) is a separate and specialized network whose primary purpose is the transfer of data among storage elements and between computer systems and storage elements. A SAN consists primarily of a communication infrastructure and a management layer. The communication infrastructure provides physical connections and the management layer organizes the connections, storage elements, and computer systems so that data transfer is secure and robust.

Storage Concentrator

The *Storage Concentrator* delivers iSCSI target volumes to hosts over TCP connections in an Ethernet network. Configuring and managing these iSCSI target volumes is accomplished using a browser-based graphical user interface (GUI) resident in the *Storage Concentrator*. Storage resources are connected to the *Storage Concentrator* through a parallel SCSI connection or other connections. The system administrator uses the graphical user interface to allocate blocks of storage to create the iSCSI target volumes and authorizes their use by individual host systems.

© StoneFly Inc. | All rights reserved

Target

Target is synonymous with destination, a target is a file, a device, or any type of location to which data is moved or copied. The target is the provider of storage.

Target Portal

An iSCSI communications gateway between a primary Storage Concentrator and a Secondary Storage Concentrator at a campus site. Once the target portal has been created, the system will recognize storage at the campus site as an available resource for creating secondary mirror images.

Volume Group

A volume group (also referred to as SPAN) is one or more separate physical devices (disk drives or RAID sub-systems) called physical volumes that are configured to form a single large storage area that is then divided into one or more separate storage areas of arbitrary size called logical volumes. Each logical volume can then be used as a separate storage space for file system or for raw data storage by specific applications; without being constrained by physical disk boundaries. This feature is useful in various situations such as creating large file systems that exceed the size of a single disk or disk array, creating two or more separate file systems on a single disk device and/or creating a number of file systems having dissimilar geometries. A Volume group is a management abstraction term. For example, management actions and policies are applied to volume groups.

© StoneFly Inc. | All rights reserved

STONEFLY

www.stonefly.com

www.iscsi.com

Eden Landing Road,
Hayward, CA 94545, USA.
(510) 265 1616
support@stonefly.com