StoneFly Inc.
www.stonefly.com
www.iscsi.com

Setup Guide

Voyager Cluster

Disaggregated High Availability SAN Storage Appliance

Dual 1U Storage Concentrator

12-bay 2U 3.5" RAID Array

This Page is intentionally left blank.

Copyright © 2006-2019 StoneFly, Inc.

All rights are reserved. No part of this document may be photocopied or reproduced without the prior written consent of StoneFly.

The information contained in this document is subject to change without notice. StoneFly shall not be liable for errors contained herein or for consequential damages in connection with the furnishing, performance, or use of this material.

StoneFly, the StoneFly logo, Storage Concentrator, Integrated Storage Concentrator, ISC, Modular Storage Concentrator, StoneFly Backup Advantage, StoneFusion, StoneFly Replicator CDP, ValueSAN, Unified Scale Out, USO, Super Scale Out, SSO, Twin Scale Out, TSO, Unified Storage & Server, USS, Unified Deduplicated Storage, UDS, Unified Encrypted Storage, UES, OptiSAN, StoneFly Voyager, DR365, DR365 Fusion, StoneFly Mirroring, Storage Concentrator Virtual Machine, SCVM, Software-Defined Unified Storage, SDUS, and StoneFly Cloud Drive are property of StoneFly, Inc.

Other brands and their products are trademarks or registered trademarks of their respective holders.

Table of Contents

1.1 Introduction 5
1.1.1 Icons 7
1.1.2 System Diagram & Description 7
1.1.3 Product Registration 8
1.1.4 Contacting StoneFly for Help 8
2.1 Mounting the Equipment 10
2.1.1. 1U Storage Controller Rack Installation Instructions 10
2.1.2. 2U Storage Controller Rack Installation Instructions 14
2.1.3. 2U RAID Array Rack Installation Instructions 19
Safety Reminders 25
3.1 Cabling the Equipment 27
4.1. RAID Array IP Address Configuration 31
4.2 Serial Port Setup 32
4.3 Web GUI IP Address Setup 35
4.4 Configuring IPMI KVM 37
4.5 Configuring the Network Settings for the Management Port 42
4.6 StoneFusion™ Software Configuration 43
4.7 Setting up Routing 49
4.8 Confirming Setup 50
4.8.1 Steps to Complete Before Setting Up the System: 51
4.9 Attaching and Removing the Front Bezel 51

 © StoneFly Inc. | All rights

Chapter-1: Introduction

© StoneFly Inc. | All rights

1.1 Introduction

This document is aimed for system administrators looking to get started with StoneFly Voyager cluster appliances. It briefly describes the initial steps for installing and launching the SAN cluster appliance.

StoneFly Voyager cluster appliances are disaggregated high availability Storage Area Network (SAN) appliances with standard iSCSI support and an optional upgrade for Fibre Channel (FC). The StoneFly Voyager is an enterprise-grade block storage with integrated data services such as synchronous replication, encryption, delta-based snapshots, and many others along with optional upgrades such as deduplication, asynchronous replication, volume encryption, etc.

This guide gives an overview of the hardware and software installation processes including Rackmount installation, appliance cabling, iSCSI-host connections, hybrid-host connections, network configuration, and software configuration.

StoneFly Resource Library: https://stonefly.com/resources

StoneFly Voyager cluster appliance webpage: https://stonefly.com/storage/san-storage

A standard Voyager cluster appliance consists of three or more hardware chassis.

- Dual 1U Storage Controller
- Dual 2U Storage Controller
- RAID Array

For further expansion, the Voyager cluster appliances support expansion units (EBODs) available in 12 to 108-bay form factors.

Supported Storage Controllers:

12Gb SAS (Voyager-DX):

- Dual 1U Storage Concentrator Cluster Quad 12Gb SAS Connection
- Dual 2U Storage Concentrator Cluster, Quad 12Gb SAS Connection

16Gb Fibre Channel (Voyager-FC):

- Dual 1U Storage Concentrator Cluster, Quad 16Gb FC Connection
- Dual 2U Storage Concentrator Cluster, Quad 16Gb FC Connection

Dual 1U Storage Concentrator (with bezel)

© StoneFly Inc. | All rights

Supported RAID Arrays:

12Gb SAS RAID array:

- 12-bay / 2U 12Gb SAS HA RAID Storage Expansion Array (12 x 3.5” SAS drives)
- 16-bay / 3U 12Gb SAS HA RAID Storage Expansion Array (16 x 3.5” SAS drives)
- 24-bay / 4U 12Gb SAS HA RAID Storage Expansion Array (24 x 3.5” SAS drives)
- 24-bay / 2U 12Gb SAS HA RAID Storage Expansion Array (24 x 2.5” SAS drives)

16Gb FC RAID array:

- 12-bay / 2U 16Gb FC HA RAID Storage Expansion Array (12 x 3.5” SAS drives)
- 16-bay / 3U 16Gb FC HA RAID Storage Expansion Array (16 x 3.5” SAS drives)
- 24-bay / 4U 16Gb FC HA RAID Storage Expansion Array (24 x 3.5” SAS drives)
- 24-bay / 2U 16Gb FC HA RAID Storage Expansion Array (24 x 2.5” SAS drives)

12-bay 2U 3.5” 12Gb SAS / 16Gb FC RAID Array

Supported expansion units (12Gb SAS):

- 12-bay / 2U 12Gb SAS HA Expansion Unit (12 x 3.5” SAS drives)
- 16-bay / 3U 12Gb SAS HA Expansion Unit (16 x 3.5” SAS drives)
- 24-bay / 2U 12Gb SAS HA Expansion Unit (24 x 2.5” SAS drives)
- 60-bay / 4U 12Gb SAS HA Expansion Unit (60 x 3.5” SAS drives – one drawer)
- 60-bay / 4U 12Gb SAS HA Expansion Unit (60 x 3.5” SAS drives – two drawers)
- 90-bay / 4U 12Gb SAS HA Expansion Unit (90 x 3.5” SAS drives)
- 108-bay / 4U 12Gb SAS HA Expansion Unit (108 x 3.5” SAS drives)

 © StoneFly Inc. | All rights

1.1.1 Icons

Icon	Type	Description
	Note	Special instructions or information
	Warning	Risk of system damage or a loss of data

1.1.2 System Diagram & Description

The figure below is an architecture diagram for StoneFly voyager cluster appliances comprising of two Storage Controllers (SC), and a shared RAID array with integrated dual active/active RAID controller.

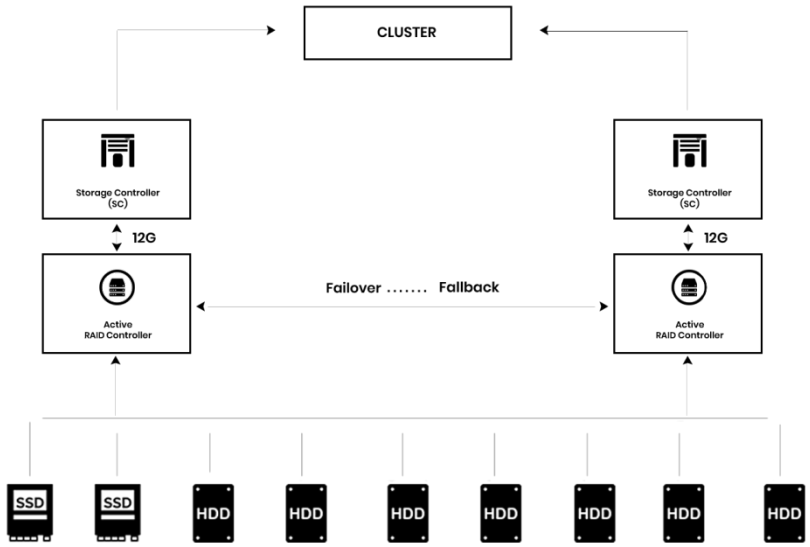

StoneFly Voyager Disaggregated High Availability Architecture

© StoneFly Inc. | All rights

1.1.3 Product Registration

To initiate StoneFly customer service for your product, you must first register the appliance. Send us an email with the following information:

Model Number: _____ _____

Serial Numbers: Your appliance serial numbers start with D500 and are located on the rear of each chassis.

1.1.4 Contacting StoneFly for Help

Please have the following information available when contacting StoneFly technical support for assistance:

Model Number: _____ _____

Serial Number(s): D500 _ _ _ _

Software Version: _____ _____

Initiators: _____ _____

Storage: _____ _____

To contact StoneFly call 510.265.1616 (Select support from the menu). Our technical support is available 24 hours a day and 7 days a week. You can also contact us via email at support@stonefly.com

© StoneFly Inc. | All rights

Chapter-2: Initial Installation

© StoneFly Inc. | All rights

2.1 Mounting the Equipment

This chapter includes steps to help install:

- 1U Storage Controller Rackmount
- 2U Storage Controller Rackmount
- 2U RAID Array Rackmount

Depending on your chosen configuration, the Voyager cluster appliances can be configured with SAS connection (Voyager-DX) or FC connection (Voyager-FC) with support for 1776 drives (1U controller) or 4440 drives (2U controller) or more with FC switch (applicable only to Voyager-FC).

For easier cabling and management, it's recommended that the dual 1U storage controllers (or the dual 2U storage controllers) are mounted closer to each other and the 2U RAID array.

To ensure proper installation and functionality of the StoneFly appliance, please observe the following warnings:

- Wear an anti-static wristband before and during the installation procedure.
- It is recommended to plug the system into two different power sources (eg. into a power outlet and another into a UPS).
- Ensure the rack which the enclosure will be mounted onto has proper grounding and over-current protection.
- Do not obstruct ventilation openings; provide 20cm of free space at the front and back of the enclosure for air circulation; keep the ambient temperature below 35 degrees Celsius.

2.1.1. 1U Storage Controller Rack Installation Instructions

This section provides information on installing the 1U storage controller appliance(s) into a rack or cabinet with the rails provided. There are a variety of rack/cabinet units on the market, which may mean that the assembly procedure will differ slightly. You should also refer to the installation instructions that came with the rack unit you are using.

NOTE: This rail will fit a rack/cabinet between 25.6" and 33" deep.

Identifying the Sections of the Rack Rails

The StoneFly appliance chassis package includes two sets of rack rails, one set for the right side of the chassis and one for the left. Each set consists of an inner rail that is pre-attached to the chassis, an outer rail that attaches to the rack, and a middle rail that slides forward in the outer rail.

 © StoneFly Inc. | All rights

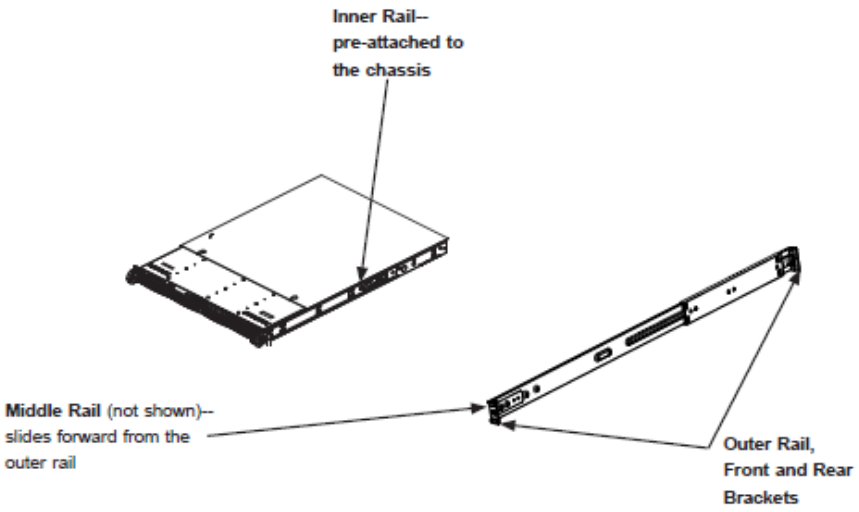

Identifying the Sections of the Rack Rails

Installing the Outer Rails onto the Rack

Each end of the assembled outer rail includes a bracket with square pegs to fit into your rack holes. If you have an older rack with round holes, these brackets must be removed, and you must use screws to secure the rail to the rack.

Outer Rail Installation

1. Align the square pegs on the front end of the rail with the square holes on the front of the rack (C). Push the rail into the rack until the quick release bracket snaps into place, securing the rail to the rack. Keep the rail horizontal.
2. Adjust the rail to reach just past the full depth of your rack.
3. Align the square pegs on the rear end of the rail to the holes on the rack (D) and push the rail into the rack until the quick release bracket snaps into place, securing the rail to the rack.

 © StoneFly Inc. | All rights

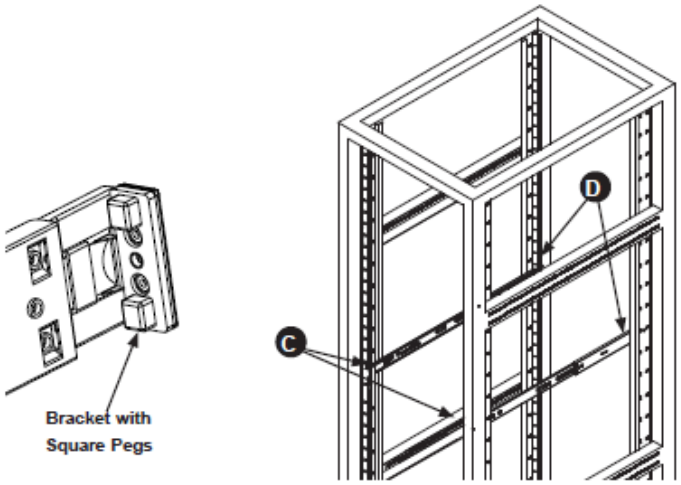

Installing the Outer Rails to the Rack

Note: The figure above is for illustrative purposes only. Always install servers at the bottom of the rack first.

Stability Hazard: The rack stabilizing mechanism must be in place, or the rack must be bolted to the floor before you slide the unit out for servicing. Failure to stabilize the rack can cause the rack to tip over.

Installing the Chassis into a Rack

Once rails are attached to the chassis and the rack, you can install the server.

1. Pull the middle rail out of the front of the outer rail and make sure that the ball bearing shuttle is locked at the front of the middle rail.
2. Align the rear of the chassis rails with the middle rails and then push evenly on both sides of the chassis until it clicks into the fully extended position.
3. Depress the locking tabs on both sides of the chassis and push the chassis fully into the rack. The locking tabs should "click".
1. Thumb screws may be used to secure the front of the chassis to the rack.

 © StoneFly Inc. | All rights

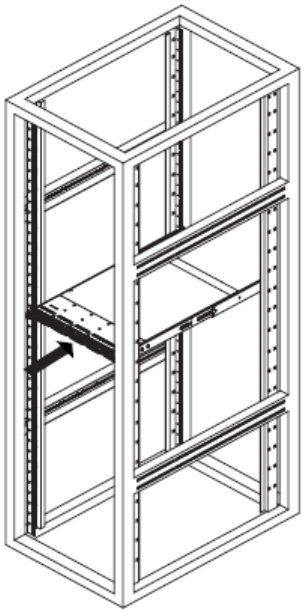

Installing the Chassis into a Rack

Note: Keep the ball bearing shuttle locked at the front of the middle rail during installation.

Note: Figure is for illustrative purposes only. Always install servers to the bottom of a rack first.

Removing the Chassis from the Rack

Caution! It is dangerous for a single person to off-load the heavy chassis from the rack without assistance. Be sure to have sufficient assistance supporting the chassis when removing it from the rack. Use a lift.

If necessary, loosen the thumb screws on the front of the chassis that hold it in the rack.

Pull the chassis forward out the front of the rack until it stops.

Press the release latches on each of the inner rails downward simultaneously and continue to pull the chassis forward and out of the rack.

 © StoneFly Inc. | All rights

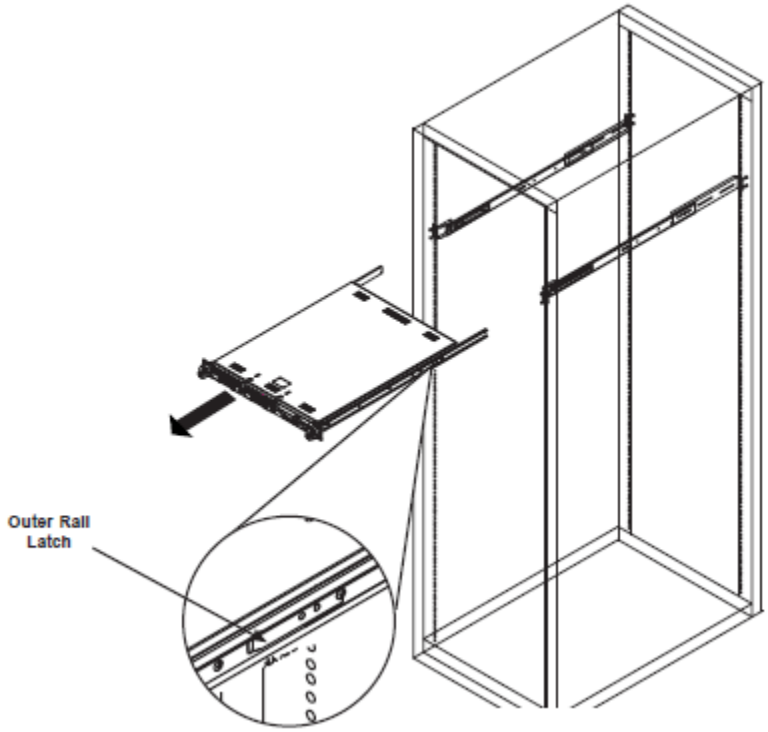

Removing the Chassis from the Rack

2.1.2. 2U Storage Controller Rack Installation Instructions

This section provides information on installing the 2U storage controller in a rack unit with rack rails provided. There are a variety of rack units on the market, so the assembly procedure may differ slightly. Refer to the installation instructions that came with your rack.

Note: This rail will fit a rack between 26.8” and 36.4”.

Identifying the Sections of the Rack Rails

The chassis package includes two rail assemblies. Each assembly consists of three sections: An inner rail that secures directly to the chassis, an outer rail that secures to the rack, and a middle rail which extends from the outer rail. These assemblies are specifically designed for the left and right side of the chassis.

 © StoneFly Inc. | All rights

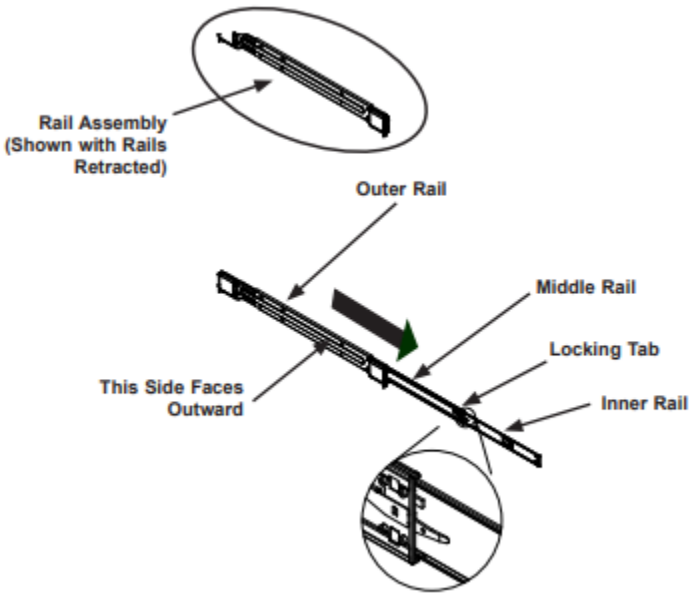

Identifying the Outer Rail, Middle Rail, and Inner Rail (Left Assembly Shown)

Releasing the Inner Rail

Each inner rail has a locking latch. This latch prevents the appliance from coming completely out of the rack when the chassis is pulled out for servicing.

To mount the rail onto the chassis, first release the inner rail from the outer rails.

Releasing Inner Rail from the Outer Rails

- Pull the inner rail out of the outer rail until it is fully extended as illustrated below.
- Press the locking tab down to release the inner rail.
- Pull the inner rail all the way out.

 © StoneFly Inc. | All rights

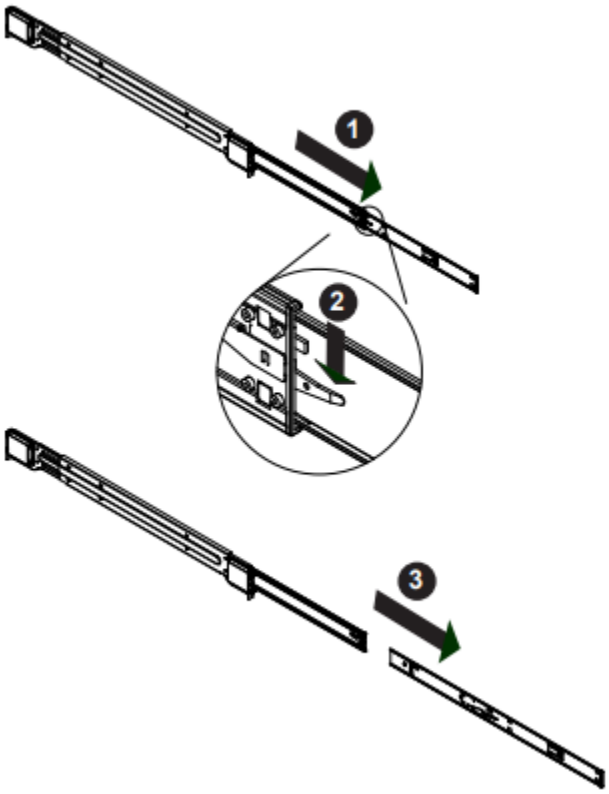

Extending and Releasing the Inner Rail

Installing the Inner Rails on the Chassis

- Identify the left and right inner rails. They are labeled.
- Place the inner rail firmly against the side of the chassis, aligning the hooks on the side of the chassis with the holes in the inner rail.
- Slide the inner rail forward toward the front of the chassis until the quick release bracket snaps onto place, securing the rail to the chassis.
- Optionally, you can further secure the inner rail to the chassis with a screw.
- Repeat for the other inner rail.

 © StoneFly Inc. | All rights

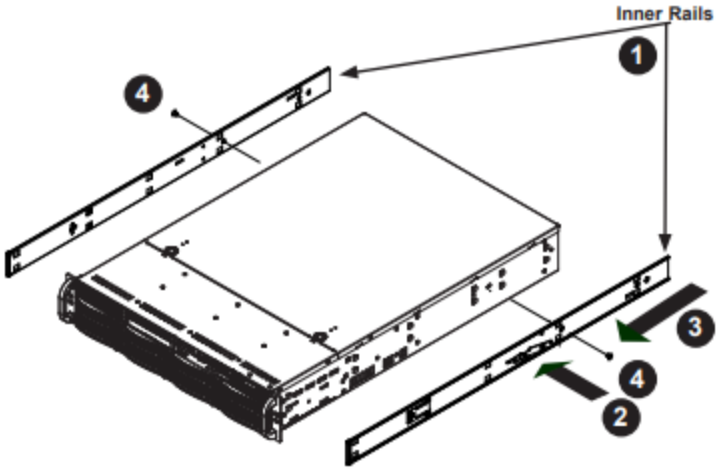

Installing the Inner Rails

Installing the Outer Rails onto the Rack

- Press upward on the locking tab at the rear end of the middle rail.
- Push the middle rail back into the outer rail.
- Hang the hooks on the front of the outer rail onto the square holes on the front of the rack. If desired, use screws to secure the outer rails to the rack.
- Pull out the rear of the outer rail, adjusting the length until it just fits within the posts of the rack.
- Hang the hooks of the rear section of the outer rail onto the square holes on the rear of the rack. Take care that the proper holes are used so the rails are level. If desired, use screws to secure the rear of the outer rail to the rear of the rack.
- Repeat for the other outer rail.

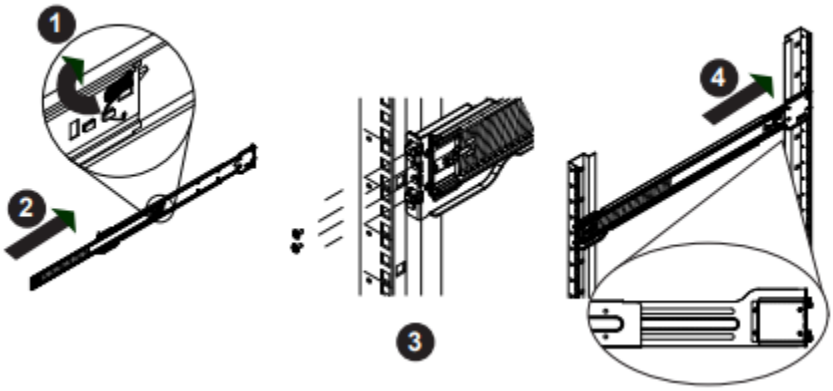

Extending and Mounting the Outer Rails

 © StoneFly Inc. | All rights

Stability Hazard: The rack stabilizing mechanism must be in place, or the rack must be bolted to the floor before you slide the unit out for servicing. Failure to stabilize the rack can cause the rack to tip over.

Do not use a two post "Telco" type rack.

Sliding the Chassis onto the Rack Rails

Stability Hazard: Mounting the system into the rack requires at least two people to support the chassis during installation. Please follow safety recommendations printed on the rails.

Installing the Chassis into a Rack

- Extend the outer rails as illustrated above.
- Align the inner rails of the chassis with the outer rails on the rack.
- Slide the inner rails into the outer rails, keeping the pressure even on both sides. When the chassis has been pushed completely into the rack, it should click into the locked position.
- Optional screws may be used to hold the front of the chassis to the rack.

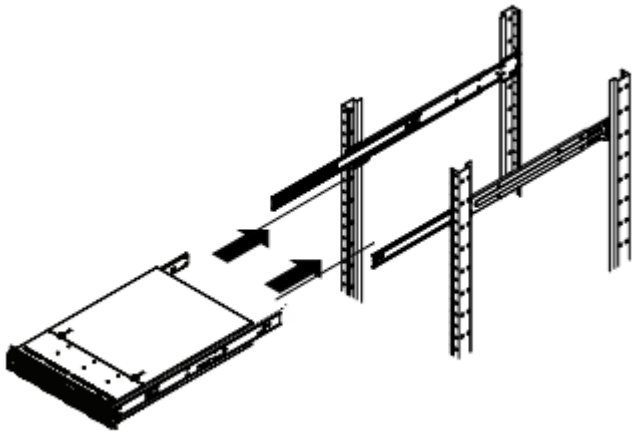

Installing into a Rack

Caution: Do not pick up the server with the front handles. They are designed to pull the system from a rack only.

 © StoneFly Inc. | All rights

2.1.3. 2U RAID Array Rack Installation Instructions

Rack Ear Mount Kit

The following table shows all accessories that came with the rack ear mount kit.

Item	Description	Quantity
01	Mounting bracket assembly, left-side	1
02	Mounting bracket assembly, right-side	1
03	Hexagon washer screws #6-32mm	8
04	Truss head screws M5 x 9.0mm	4
05	M5 cage nuts	4
06	M5 x 25mm	4
07	M6 x 25mm	4
08	#10-32 x 25.4mm	4

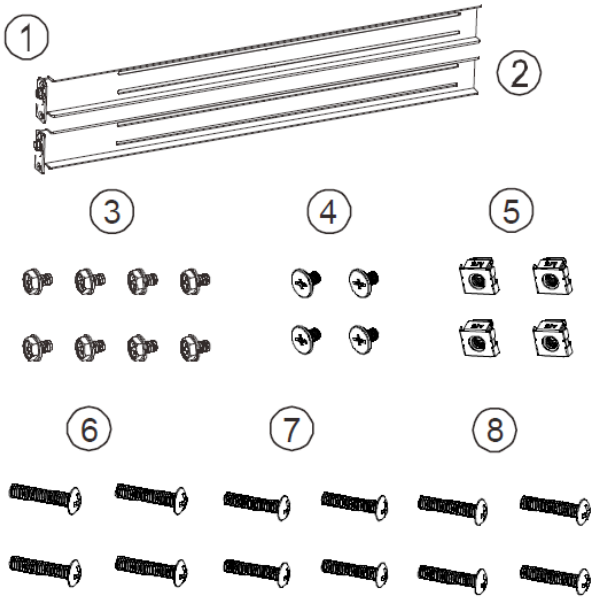

 © StoneFly Inc. | All rights

Installation Procedure

- The installation begins with determining the installation position and M5 cage nut (5) insertion location.

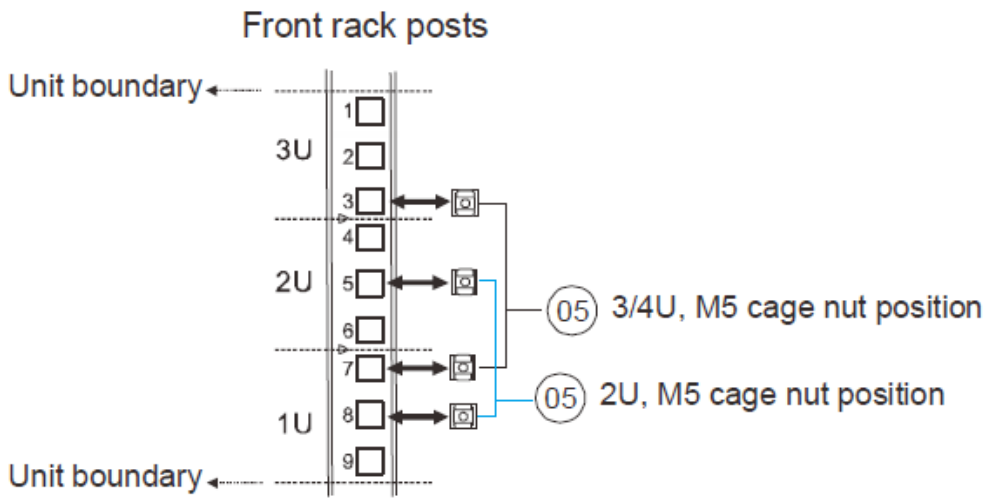

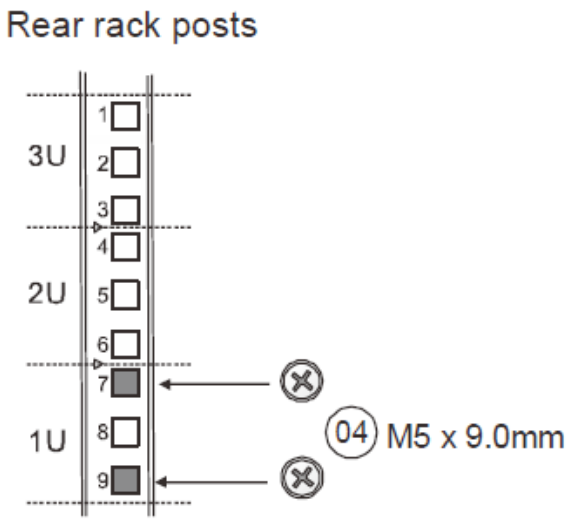

 © StoneFly Inc. | All rights

- Install the fixed rack ear mount to the rear posts and secure them using truss head screws (4)

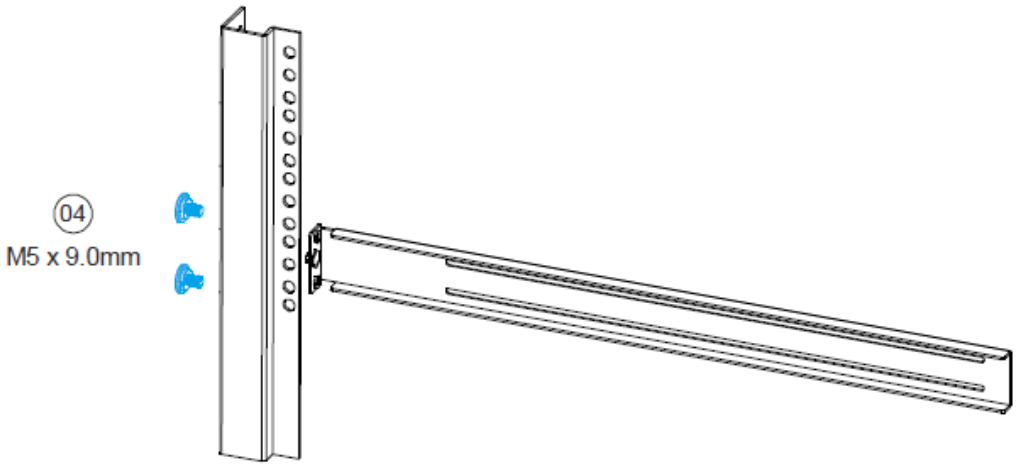

- With the assistance of another person holding the enclosure at the installation height, the other person can place four M5 x 25mm (6) at the front of the enclosure and eight #6-32 screws (3), four on each side, to secure the enclosure into the rack.

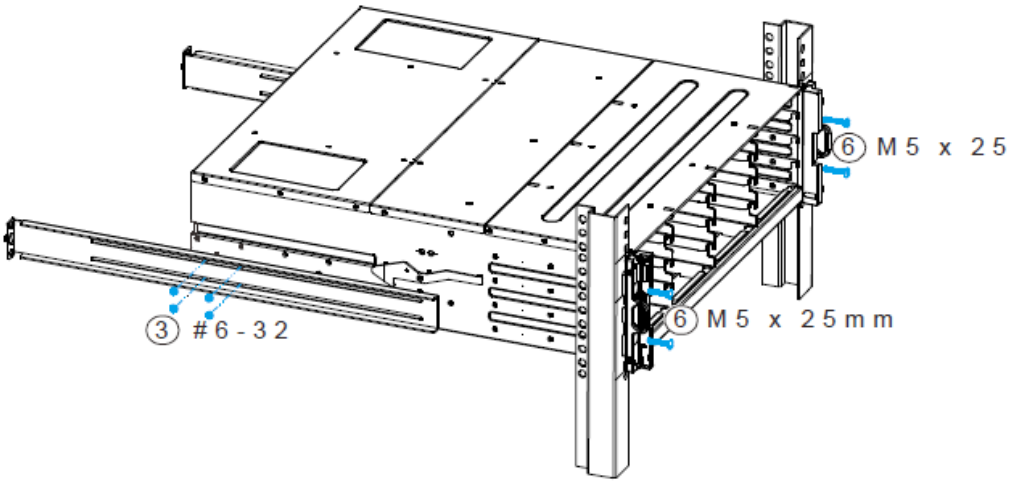

© StoneFly Inc. | All rights

Slide Rail Kit

The following table shows all accessories that came with the slide rail kit.

Item	Description	Quantity
01	Mounting bracket assembly, left-side	1
02	Mounting bracket assembly, right-side	1
03	Inner glides	2
04	Flathead #6-32 L4	6
05	Truss head screws with M5 x 9.0mm	8
06	M5 cage nuts	4
07	M5 x 25mm	4
08	M6 x 25mm	4
09	#10-32 x 25.4mm	4

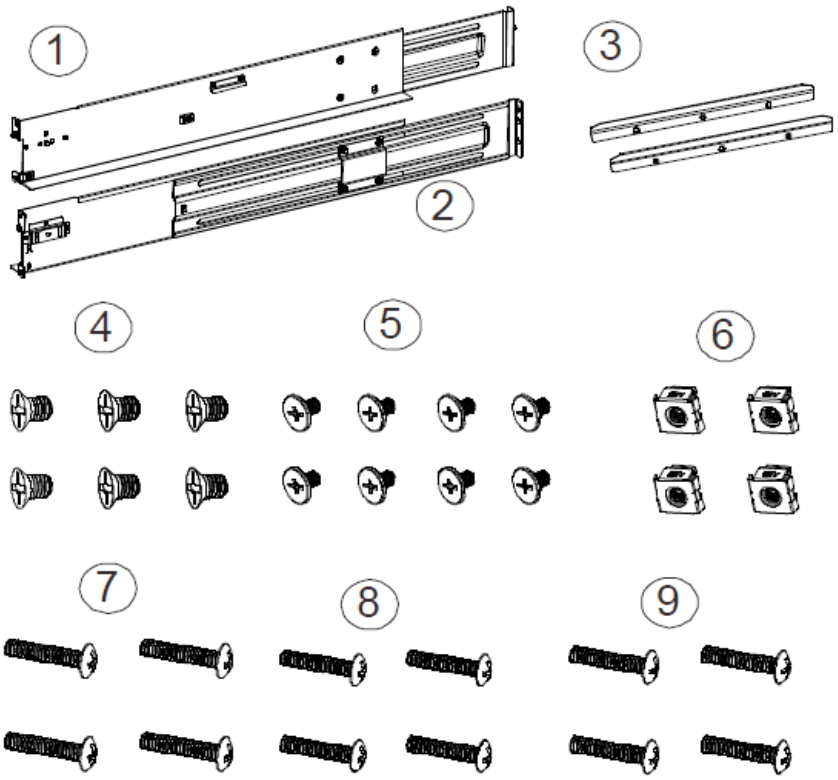

 © StoneFly Inc. | All rights

- The installation begins with determining the installation position (front and rear rack positions) and M5 cage nut (5) insertion location.

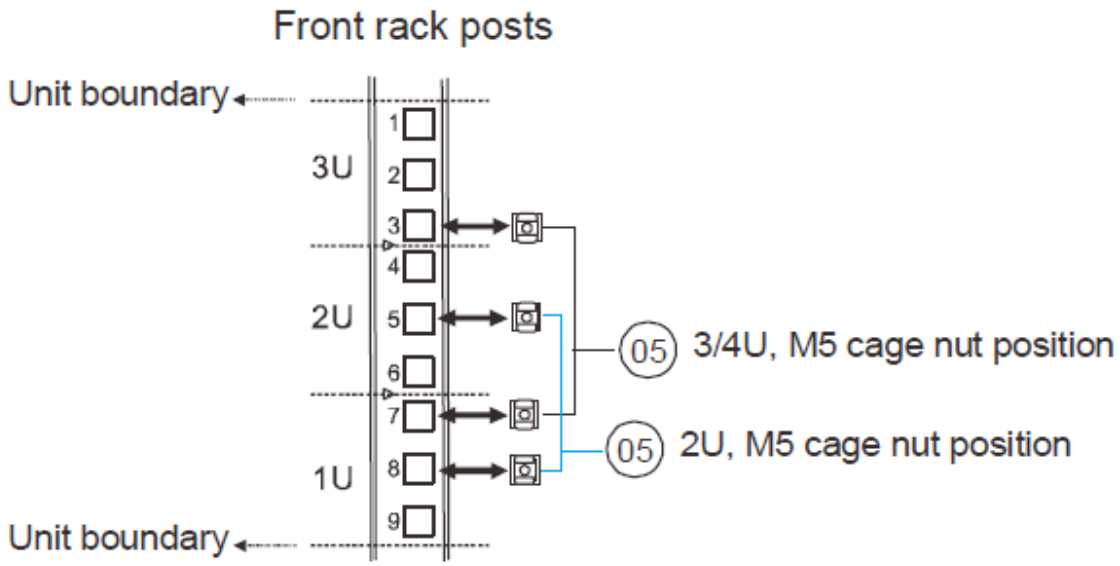

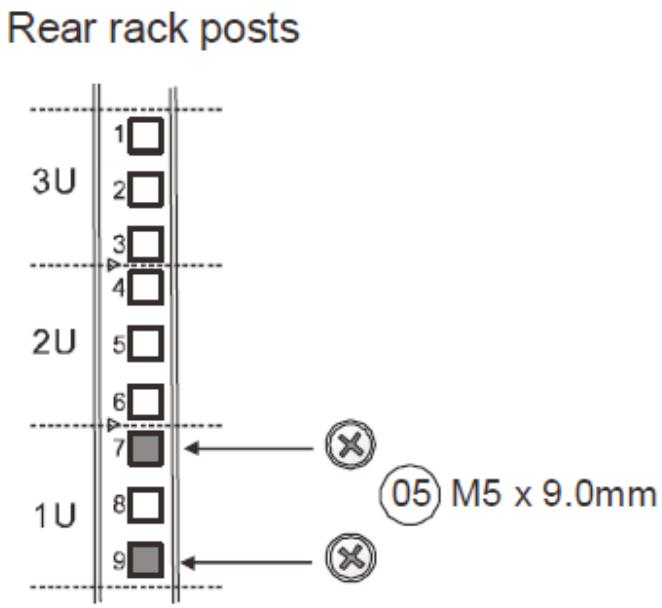

© StoneFly Inc. | All rights

- Adjust the length by loosening the four screws on the slide rail. Secure the slide rails to front and rear posts using truss head screws. Tighten the four screws on the slide to fix the length.

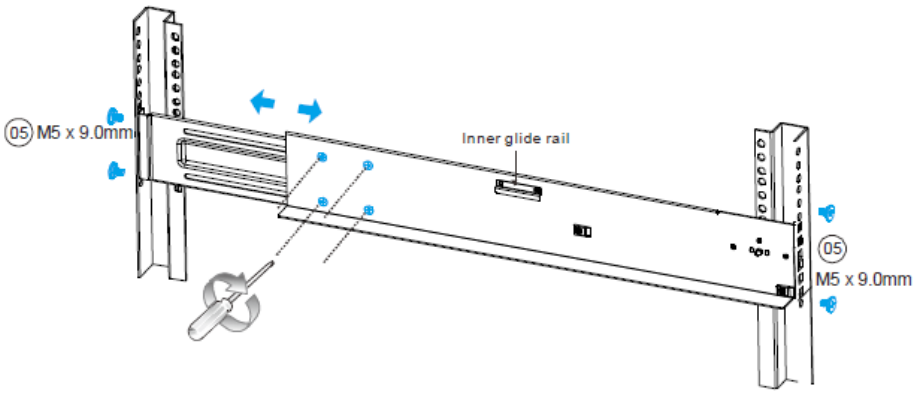

- Attack the inner glides to BOTH sides of the enclosure using flathead screws #6-32 (8)

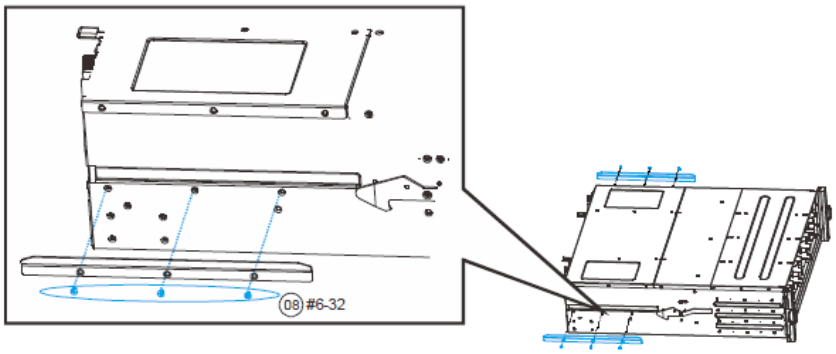

- With the assistance of another person, lift and insert the enclosure onto the slide rail. Make sure the inner glides on both sides of the enclosure meets the inner glide rail. Secure the enclosure with M5 or M6 screws from the front.

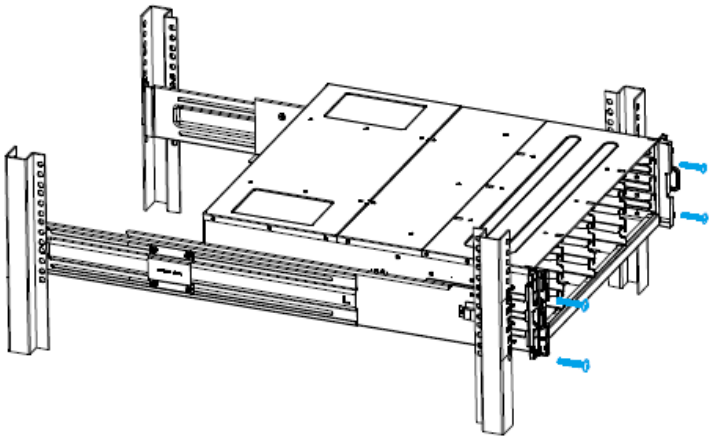

 © StoneFly Inc. | All rights

Safety Reminders

If you must relocate the enclosure after installation:

- Cease all input/output transactions, shutdown the system, disconnect all cables.
- Empty all drive bays (hard drives + hard drive trays) and transport them separately in safe packaging.
- Modules came installed within the enclosure need not be removed.

When the system is in operation:

- Module and drive bays must not be empty. They must have a dummy cover / plate in place to stabilized internal airflow.
- Should a module fail, leave it in its place until you have the replacement item on-hand to take its place.
- Allow at least 18-20cm of clearance space at the rear of the enclosure for ventilation.
- Avoid touching the PCB and gold-finger connections.

© StoneFly Inc. | All rights

Chapter-3: Cabling Connections & Power Up

© StoneFly Inc. | All rights

3.1 Cabling the Equipment

The following description shows the steps for two Storage Concentrators, and one RAID array. Please make sure that you've securely mounted the appliances in the rack/cabinet before beginning the cabling. It's also important to note that the power is connected AFTER all of the data/network connections have been made.

Spanning Tree Protocol (STP) must be disabled on your network switch when using bonded data ports on the StoneFly Voyager appliances.

Note: Follow the labels for each port as marked on your appliance(s).

SAS Interconnects – Standard Configuration

Connect the two included Mini-SAS HD cables between each SC and the RAID array as shown below:

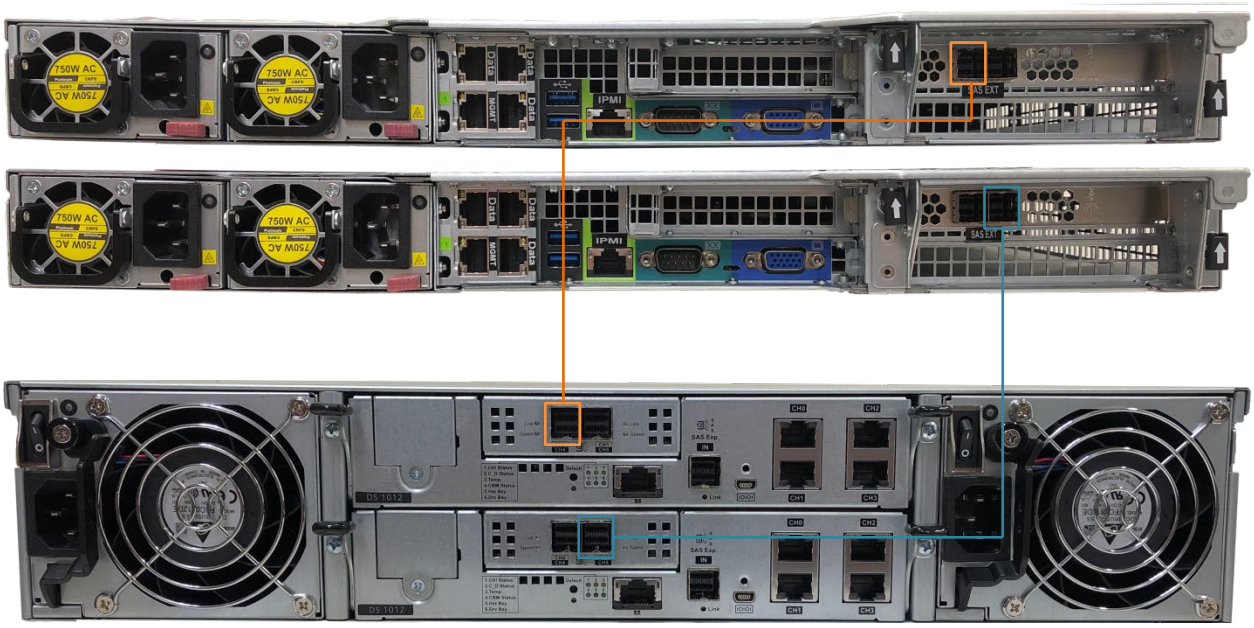

SAS Interconnects – Multipath Connections (Optional Upgrade)

If you have purchased the optional StoneFly Multipathing Kit, then you will be able to connect each SC to both RAID controllers on the HA RAID Storage Expansion Array.

The four Mini-SAS HD cables will be connected between each SC and the RAID array, as shown below (optional multipathing configuration):

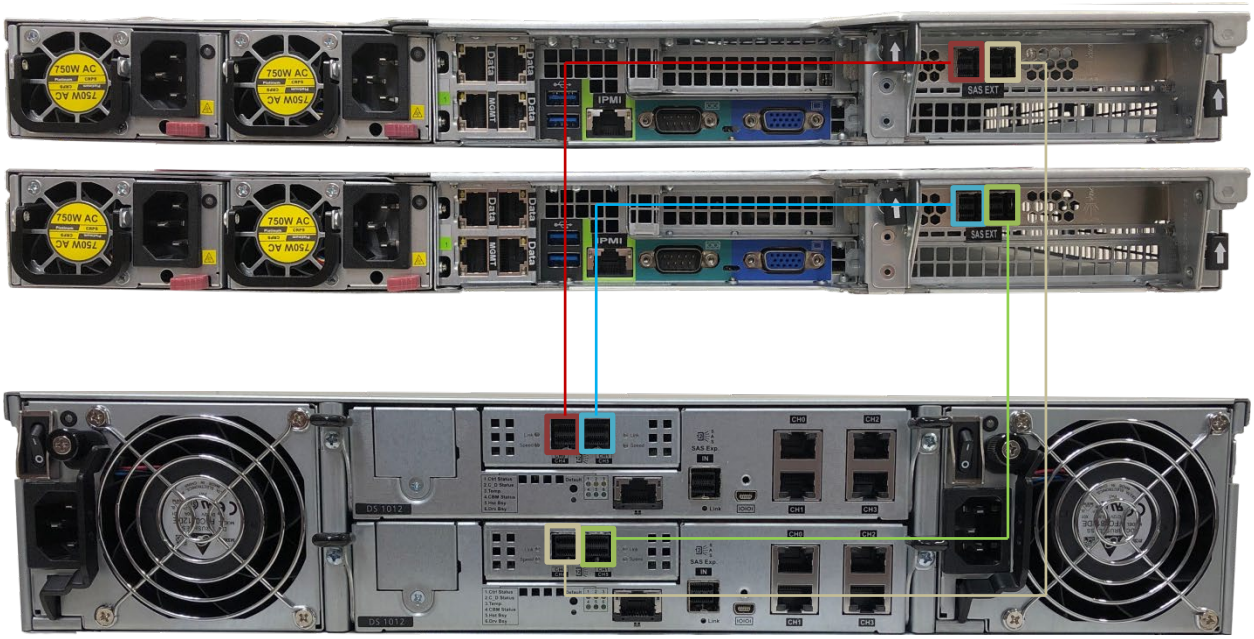

Network Connections

Connect RJ-45 cables to the data ports on each SC, and Ethernet cables to each of the Management ports (MGMT) on all three units as shown below. For best practices, split the connections between at least two switches for each type of port.

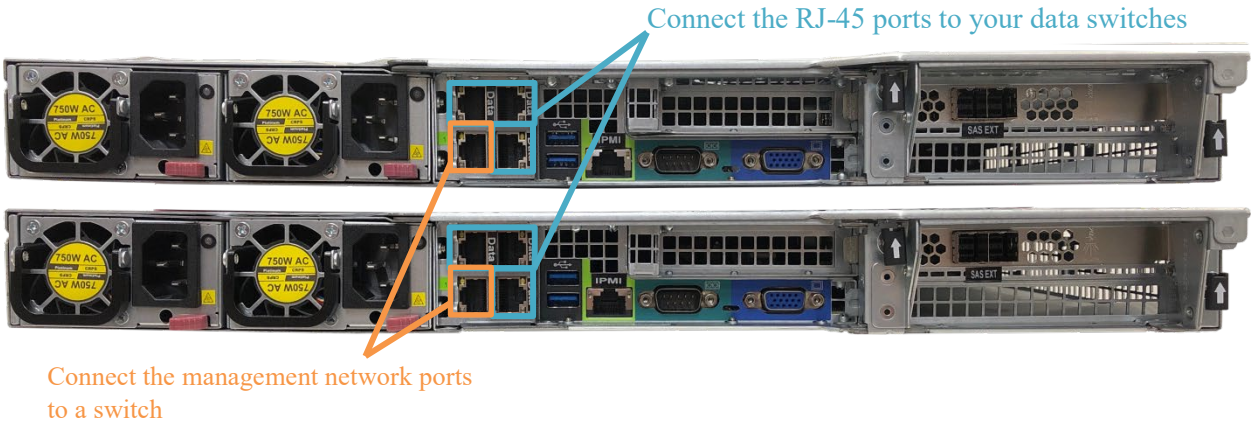

© StoneFly Inc. | All rights

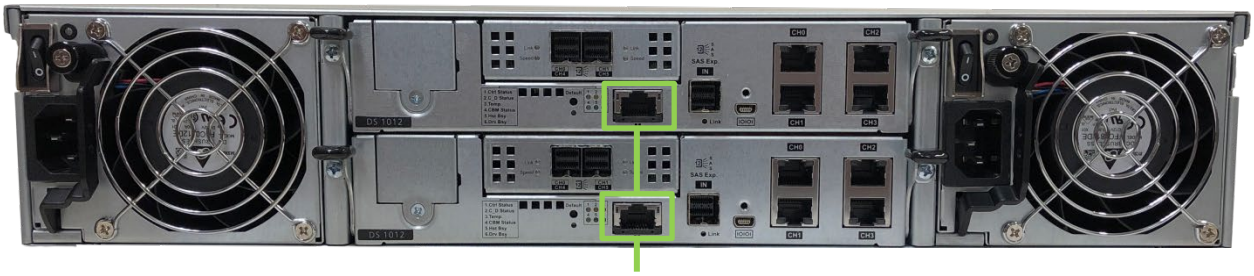

Connect the management network ports to a switch

Power Connections

Note: Make sure to make all the connections for both SCs as described above before connecting the power cords to the system.

Connect power cord

Connect power cord

Once you've made all the connections and made sure that there are no loose cords, press the power button to turn on the system.

© StoneFly Inc. | All rights

Chapter-4: Software Configuration

© StoneFly Inc. | All rights

4.1. RAID Array IP Address Configuration

You can configure the IP address for the RAID array via either the Serial port or Ethernet port on the rear of the unit.

Serial port: A Y-cable is provided in the package. (NOTE: null modem may be required if you are using a third-party cable).

The serial port's defaults are:

Baud Rate	38400
Data Bit	8
Parity	None
Stop Bit	1
Flow Control	Hardware

For TCP/IP connection and firewall configuration with a management station running the storage array's web interface, please refer to storage array web interface online help or User's Manual. If your network environment is not running DHCP server protocols, a default IP address of <10.10.1.1> can be used to access the unit for the first time.

Use the Ethernet management port for management purposes only, i.e., storage array web interface or telnet console. This Ethernet management port is not used for I/O transactions.

Management network ports are boxed in red, serial ports are boxed in blue. This is an example controller, controllers do vary from configuration to configuration.

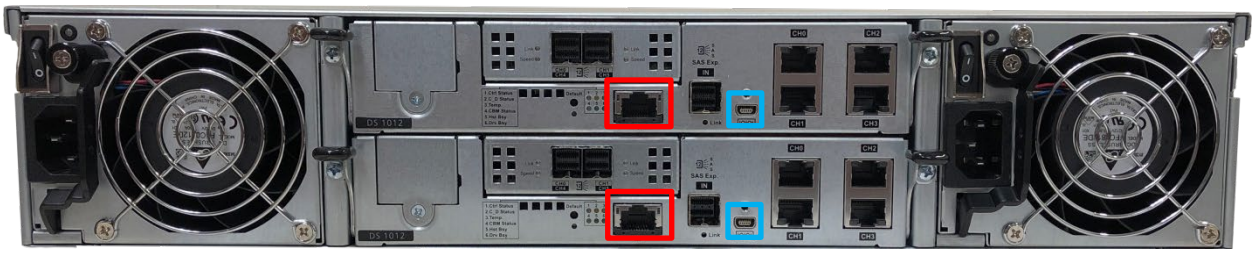

 © StoneFly Inc. | All rights

4.2 Serial Port Setup

When setting up via the serial port, enter the settings as shown below:

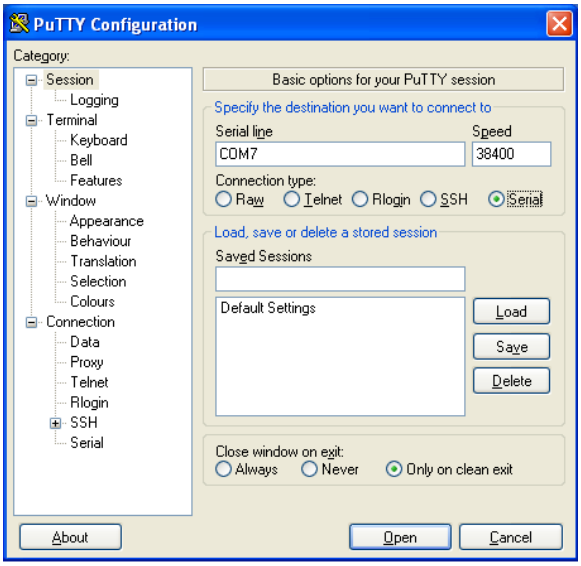

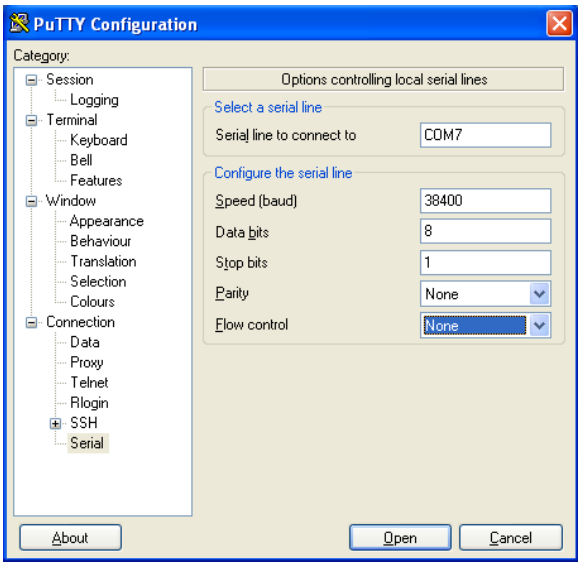

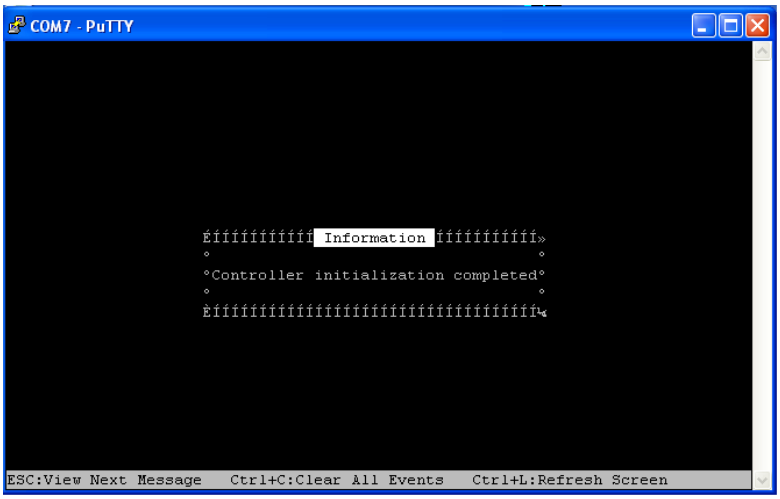

Hit **ESC** to view next screen.

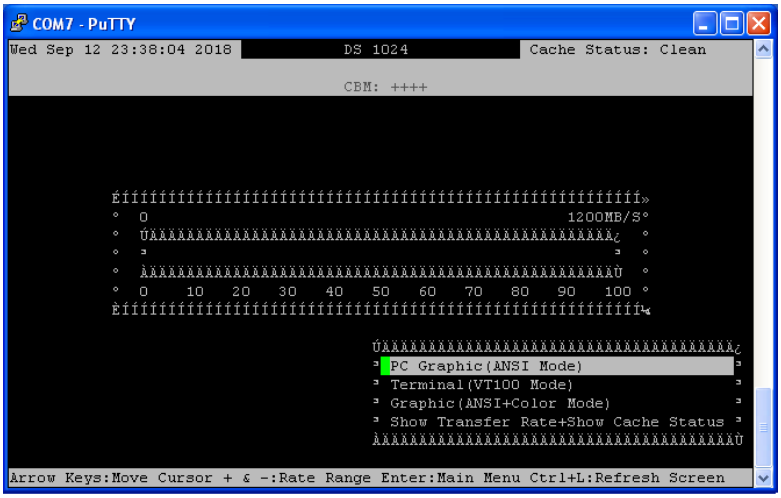

Select **PC Graphic (ANSI Mode)** then hit enter.

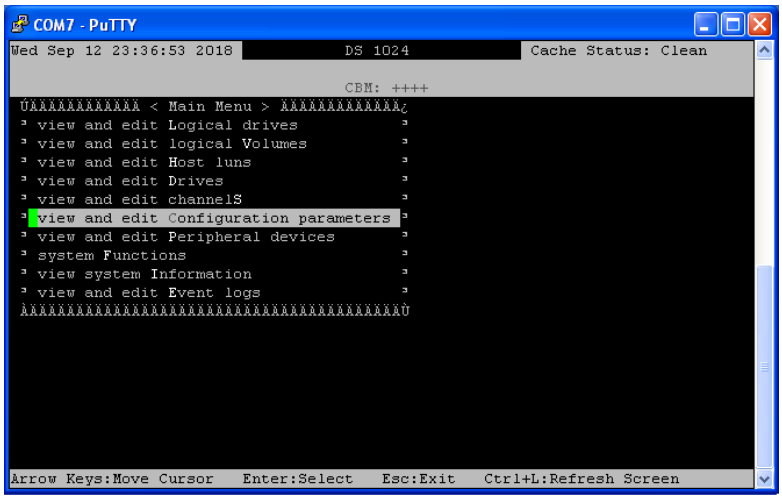

Select **view and edit Configuration parameters** then hit enter.

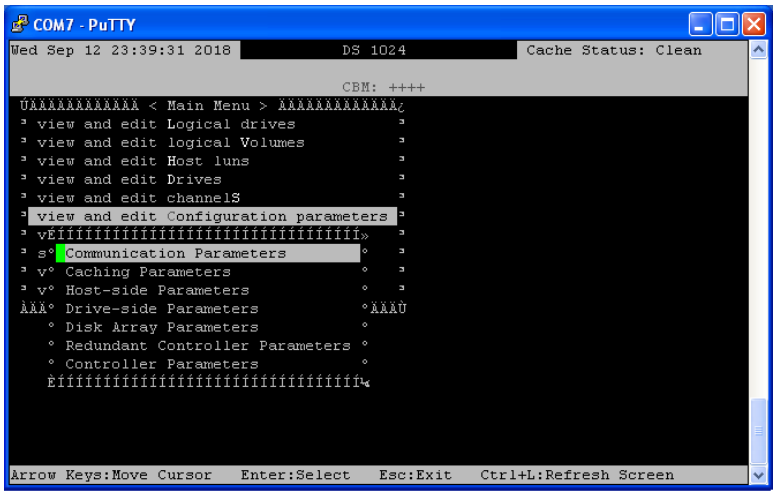

Select **Communication Parameters** and hit enter.

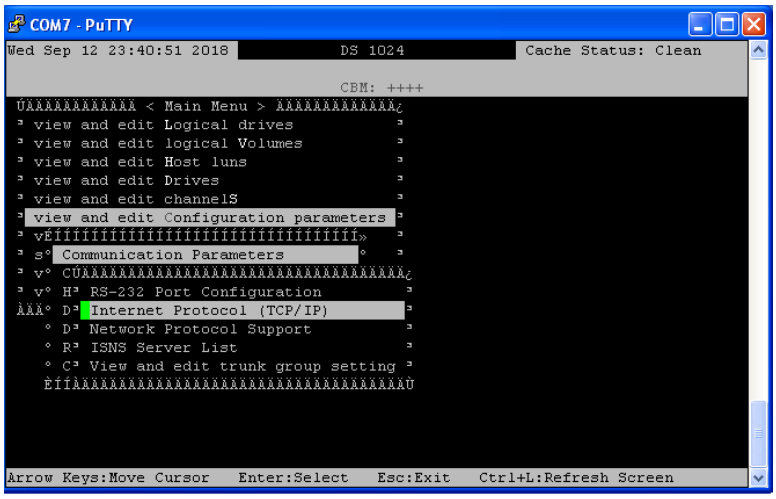

Select **Internet Protocol (TCP/IP)** and hit enter.

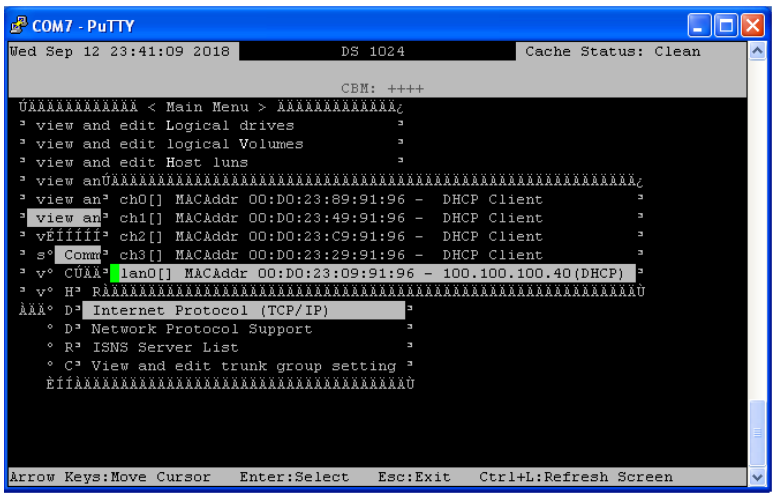

Select **lan0** and hit enter, then select **static** and enter the IP address as needed.

4.3 Web GUI IP Address Setup

When setting up via the Ethernet port/web GUI, follow the instructions as shown below:

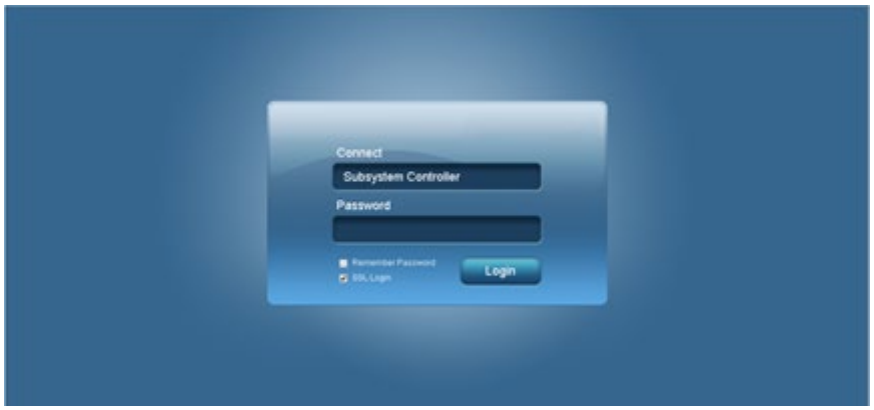

The default Password is blank. Just click on the **Login** button.

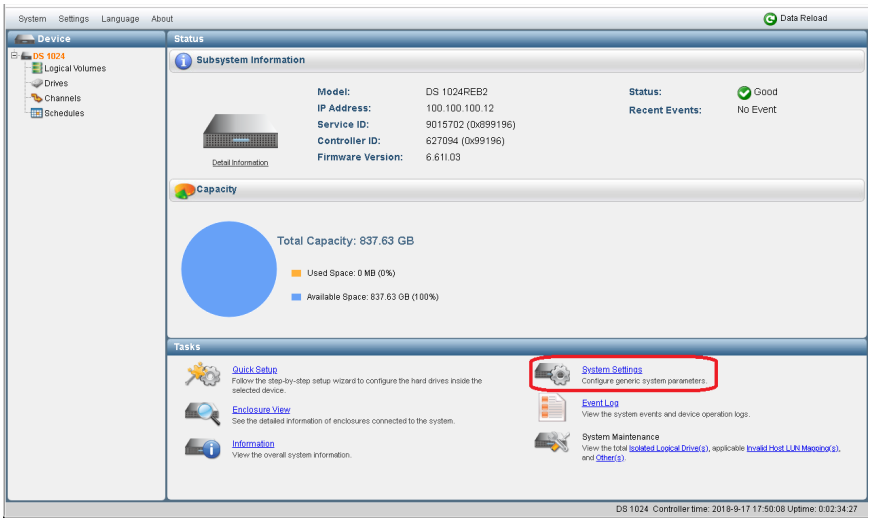

Click on **System Settings**.

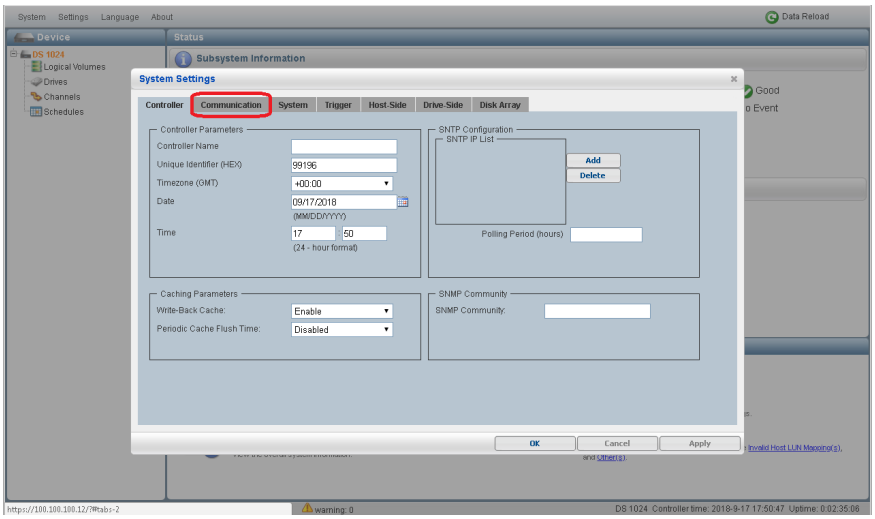

Select **Communication**.

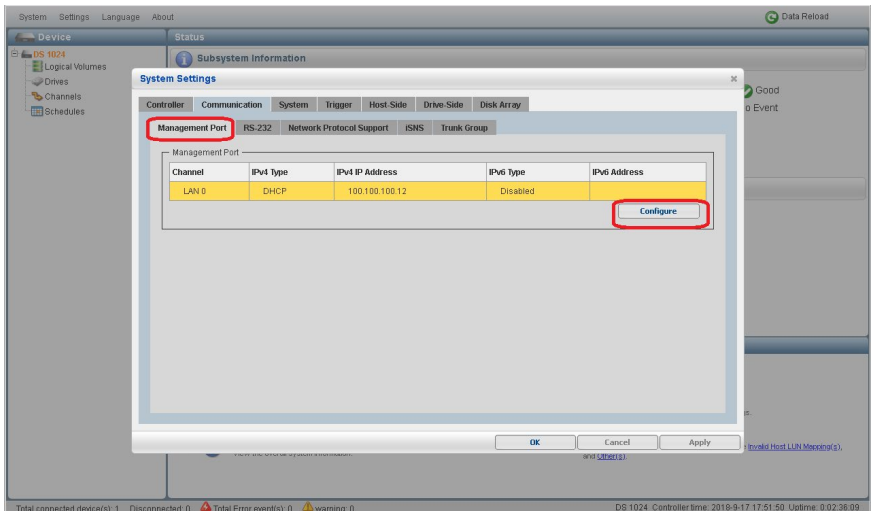

Select **Management Port** then click on the **Configure** button.

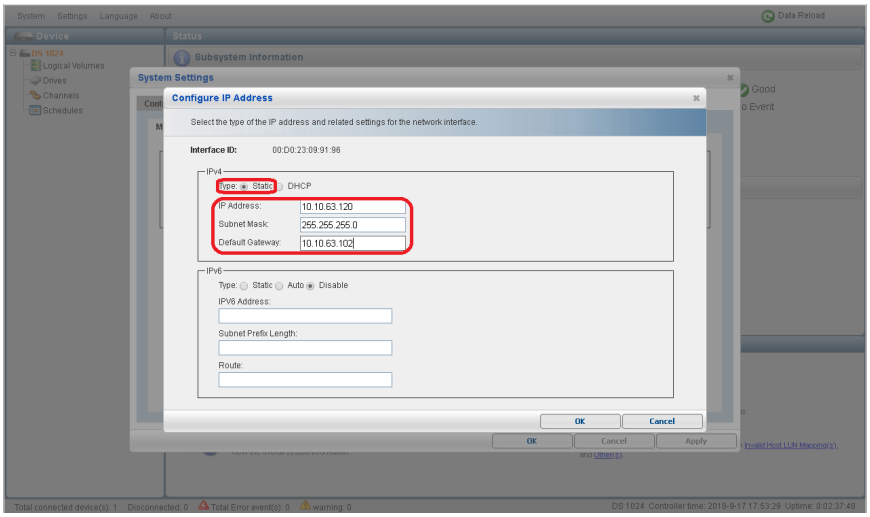

Select **Static** then enter your network information. Click **OK** when completed.

4.4 Configuring IPMI KVM

The Intelligent Platform Management Interface (IPMI) KVM configuration allows for **Remote Management** and **Power Control** of the StoneFly Voyager SAN system. This configuration is optional to perform, but recommended. These steps must be performed on both SC.

To configure the IPMI module, connect a Keyboard and Monitor to the System. Power on the system and press the “Del” key to enter the BIOS setup.

 © StoneFly Inc. | All rights

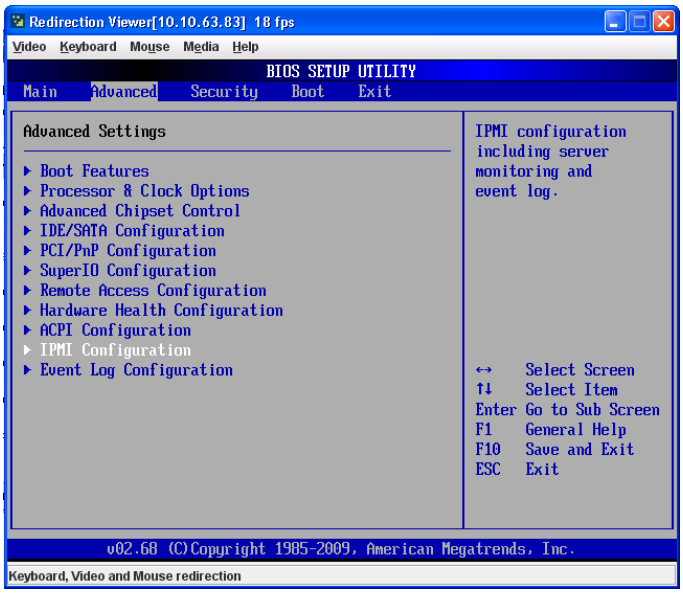

On the BIOS screen, navigate to the **Advanced** tab and select **IPMI Configuration**. The IPMI configuration screen will be displayed.

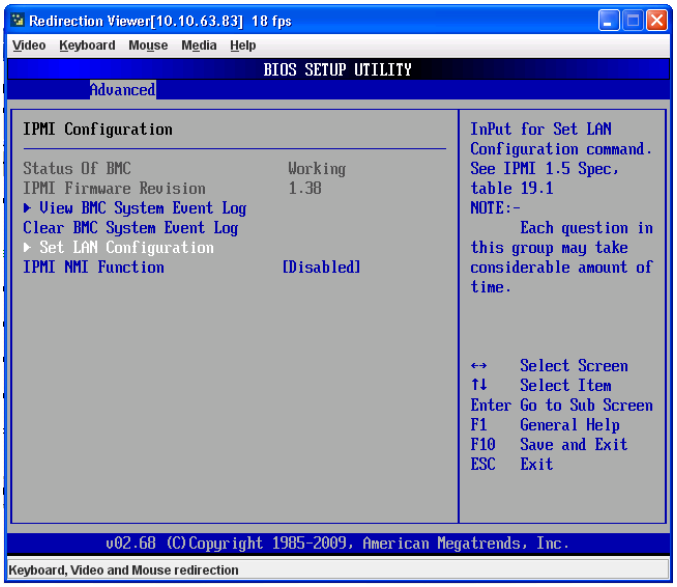

Select **LAN Configuration**. The network settings will be displayed.

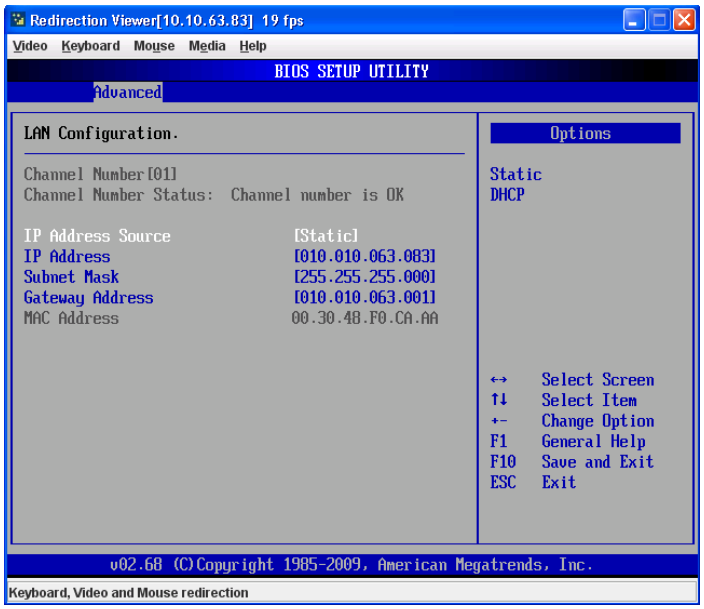

Adjust the following as needed:

1. IP Address Source Choose “Static”
2. IP Address Must be on the same subnet as Voyager’s Management port
3. IP Subnet Mask Same as Voyager’s Management port
4. Default Gateway Same as Voyager’s Management port
5. Update LAN Settings Yes

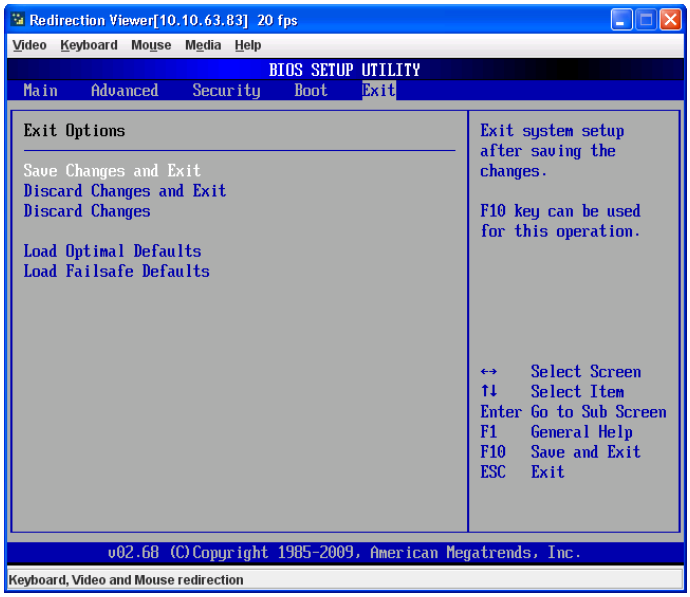

Press the **ESC** key to exit. Navigate to the **Exit** tab and select **Save Changes and Exit**.

Note: The system will require power to be removed before IPMI IP Address will take effect.

Start a browser and navigate to the configured IP address.

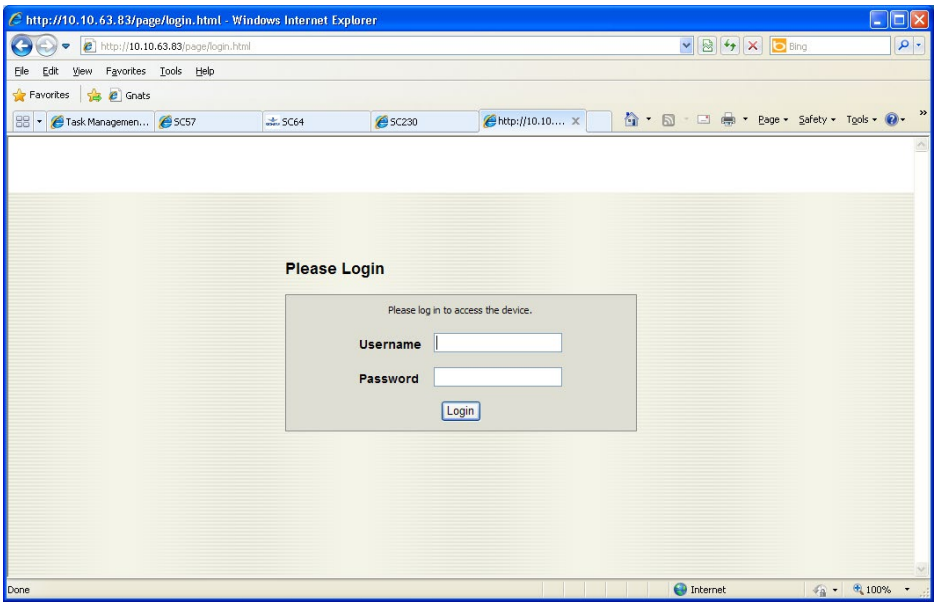

Enter the following information in the login screen:

- Username: ADMIN
- Password: ADMIN

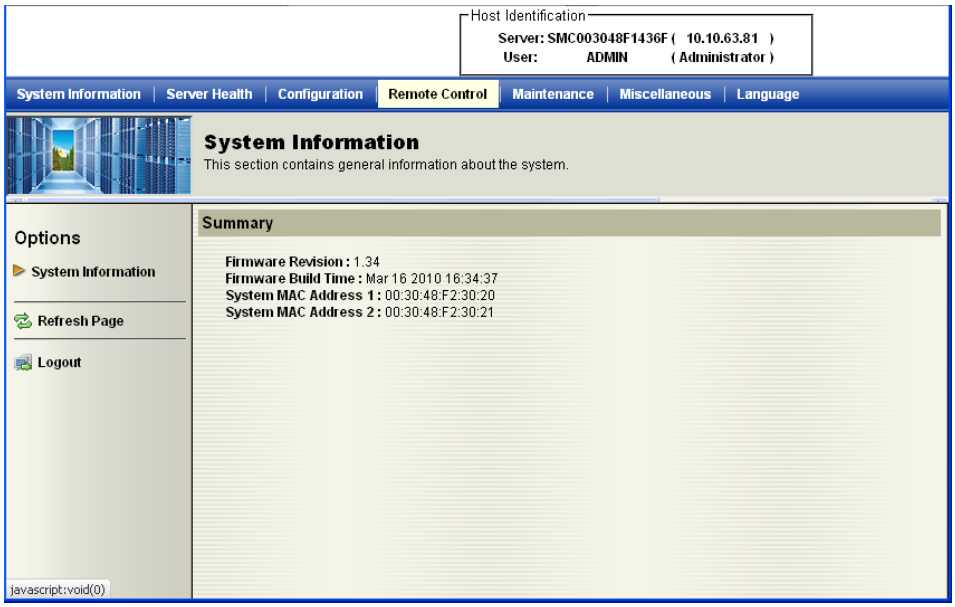

Select **Remote Control** tab to access system console.

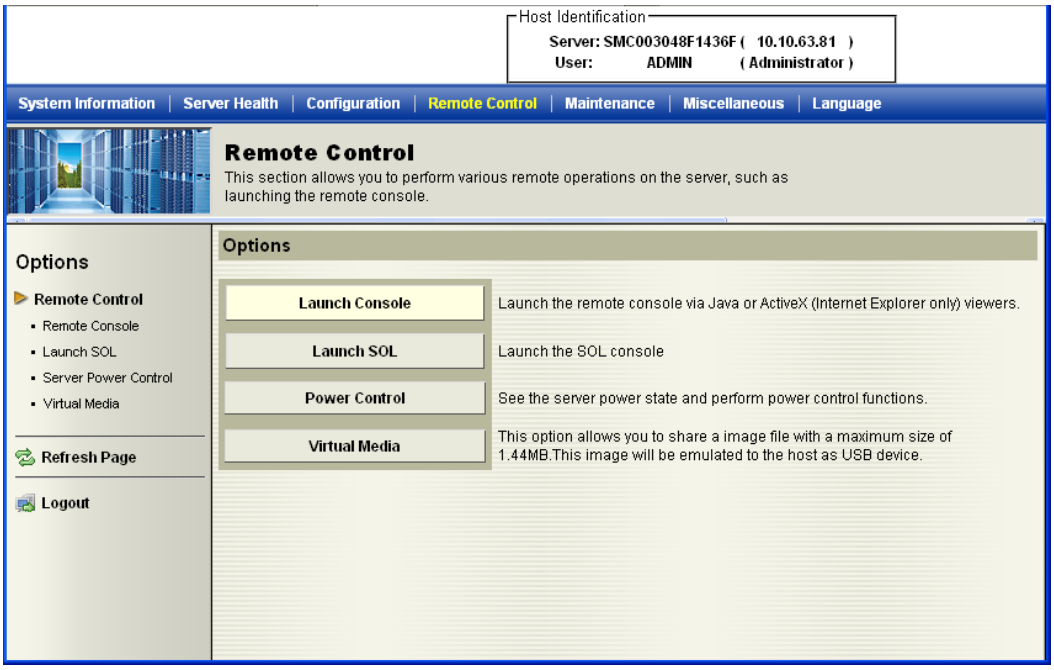

Select **Launch Console** to open system console.

The system user console screen will appear.

4.5 Configuring the Network Settings for the Management Port

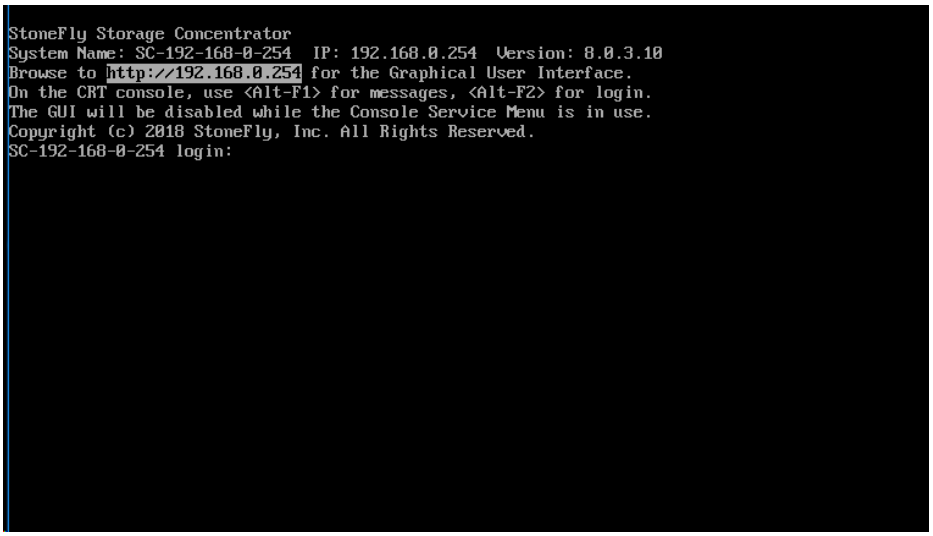

The management port is preconfigured with the default IP address of 192.168.0.254. This must be changed to a valid IP address for your LAN network. Using the remote console you loaded in the previous section:

Press **Enter** to display the login prompt.

At the User ID prompt type **console** and hit **Enter**.

At the password prompt type **coni100o** and hit **Enter**. Note that the User ID and password are case sensitive.

Using the Storage Concentrator Service menu, enter **2** to select **Network**.

The current network configuration settings will appear as shown below:

```
System Name: SC-192-168-0-254 IP: 192.168.0.254 Version: 8.0.3.7

Storage Concentrator

Service->Network
-----------------
1- Default Gateway (192.168.0.254)
2- Management IP Address (192.168.0.254)
3- Management Netmask (255.255.255.0)
4- Management Network (192.168.0.0)
5- Management Broadcast (192.168.0.255)
6- Management Use DHCP (No)
7- Primary DNS Server ()
8- Secondary DNS Server ()
s- Save Changes

q- Back to Service...

->
```

Configure all of the network settings to those appropriate for your LAN network by selecting each of the numbered fields. When finished, enter **s** option to **Save Changes**, then completely exit the CLI using the **q** option for **Logout**. The login prompt should reappear.

Browser access to the appliance management GUI is blocked while the CLI menu is active. Also note that there can be a short delay before the web GUI becomes available once the CLI is closed.

At this point, it should be possible to login to the web GUI for the StoneFly appliance by browsing to the management IP address that you just configured in the last step. Once logged in, you should configure the SAN data network settings.

4.6 StoneFusion™ Software Configuration

StoneFly Voyager comes pre-installed with StoneFly's Software Defined Storage (SDS) solution: StoneFusion. This section describes the configuration process for the StoneFusion software.

© StoneFly Inc. | All rights

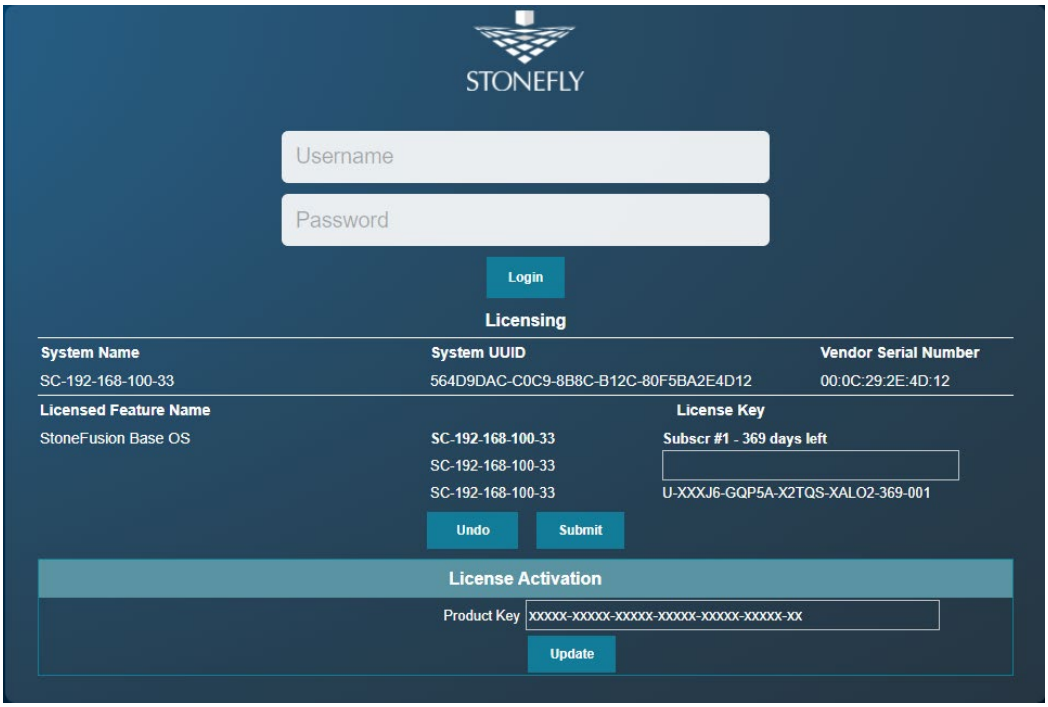

Figure 11: StoneFusion Login Screen

2. In the User ID field type: **admin**
3. In the Password field type: **M@n4g1ng**
4. Click **Submit**. The Home Page screen will appear.
5. Click **System**.
6. Click **Admin**.
7. Click **Auto Save**. The Auto Save screen will appear.

© StoneFly Inc. | All rights

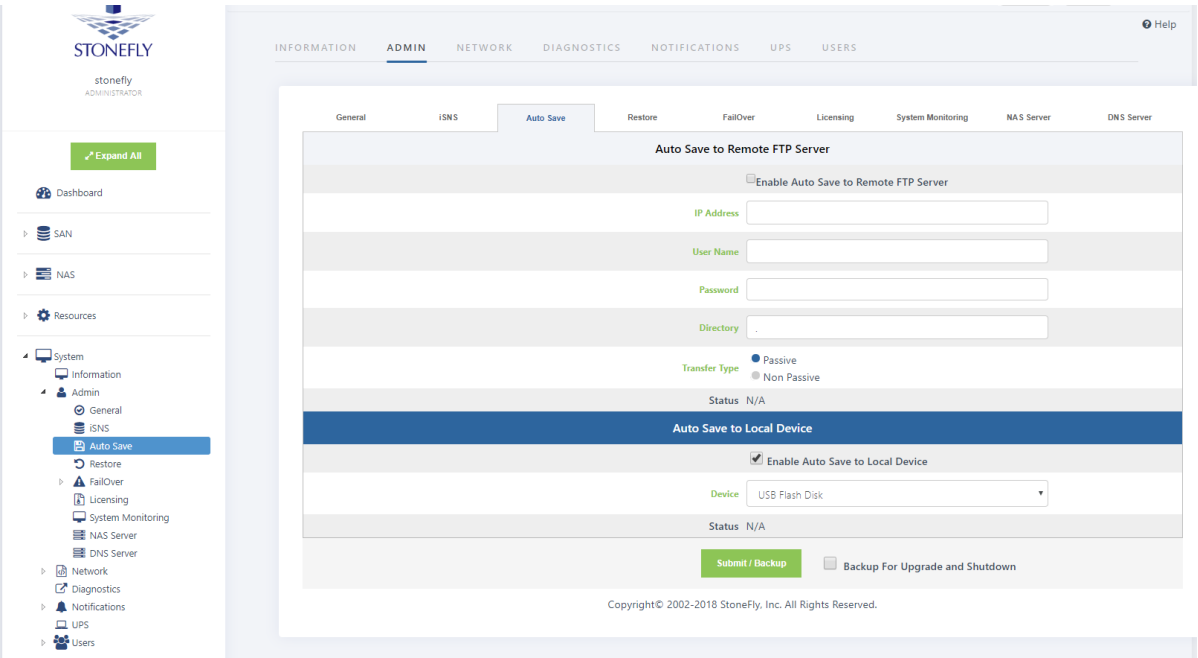

Figure 12: StoneFusion Auto Save Screen

8. Select method(s) of saving the database. A USB Flash drive must be inserted into the USB port prior to Enabling. Checkmark **Enable Auto Save to Local Device** and select **USB Flash Disk** from the dropdown. Click **Submit**. For **Auto Save to Remote FTP Server** create a directory for each Storage Concentrator. Fill in the IP Address, User Name, Password and directory. Select **Passive** or **Non Passive** and click **Submit**. Both methods can be used, but at least one should be configured to ensure recovery if needed.

9. Navigate to **Admin > General**. The System Admin screen will appear.

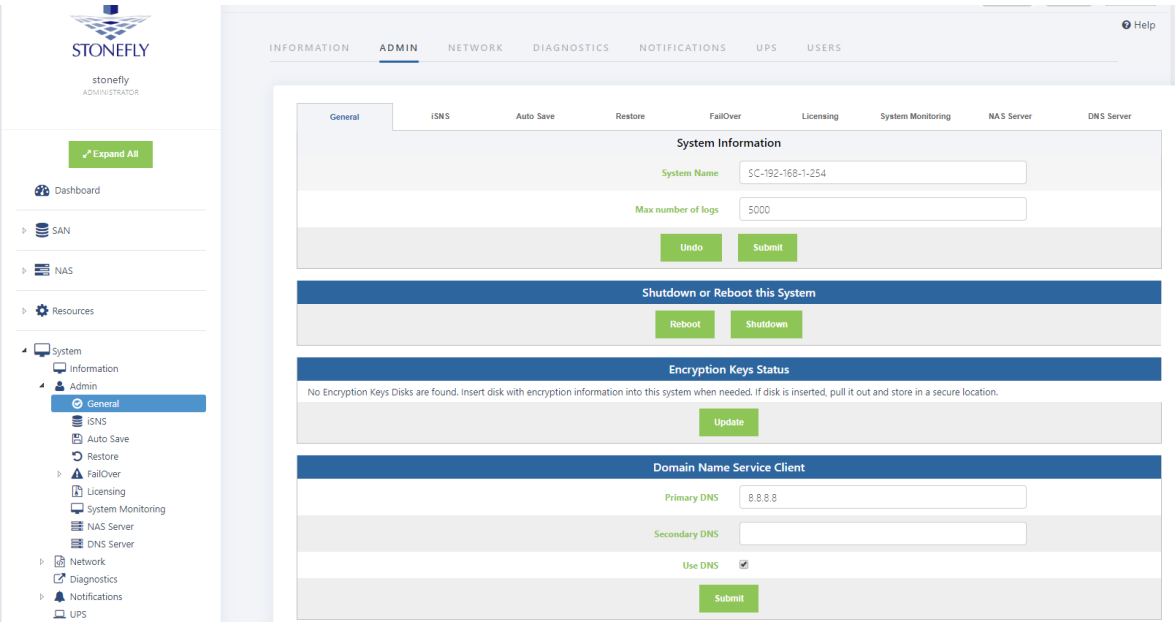

Figure 13: StoneFusion Admin Screen

10. Enter a system name for the *Voyager*.
11. Enter the number of log records for the database in the **Max number of logs** field.

The default number of log records is 2000, which is sufficient for most installations.

12. Click **Submit**.
13. Navigate to **Network > Data Port**. The Local iSCSI Data Port Settings screen appears with the current system (factory) settings. Most fields are blank.

© StoneFly Inc. | All rights

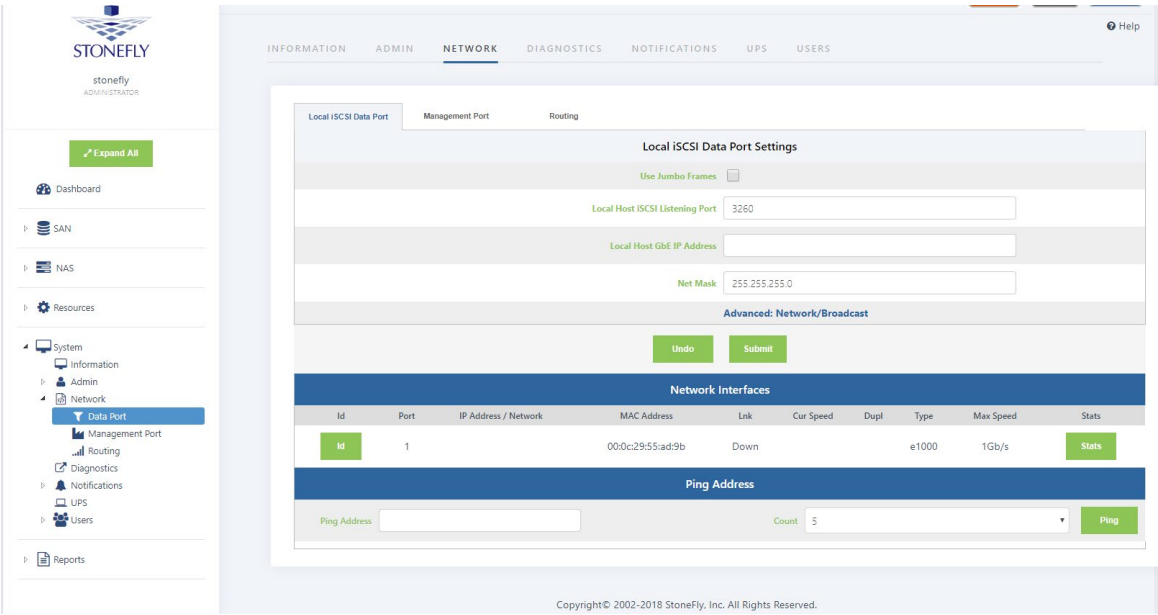

Figure 13: StoneFusion Local iSCSI Data Port Settings Screen

14. Enter the **IP Address** for the Local iSCSI Data Port.
15. Enter the **NetMask** setting for the Local iSCSI Data Port.
16. Click **Submit**.
17. Click **OK** to continue when the confirmation dialog box appears. The *Voyager* automatically configures the Network and Broadcast settings based on the IP address and Netmask settings. Click on the **Advanced: Network/Broadcast** link to view or modify the Network and Broadcast settings. For more information, see "Chapter 2: Administrative Interface" in the *Storage Concentrator User's Guide*.
18. Review the status of all SAN Network Interfaces to select which ports will be used. It is not necessary to select all available ports. All ports selected must have cables attached to them to maintain the proper cluster configuration and operation. The **Id** button is used to flash the link light on a specific port. Select a port by clicking on the box in the **Bond** column. Changes are not enforced until the next reboot. At first power up a default configuration is presented. Changing the default settings requires a reboot of the Storage Concentrator. Navigate to the **System > Admin > General** screen and click on **Reboot**. If no changes are desired continue to the next step to configure the Management Port.

19. Click on **Management Port**. The Management Port Settings screen appears.

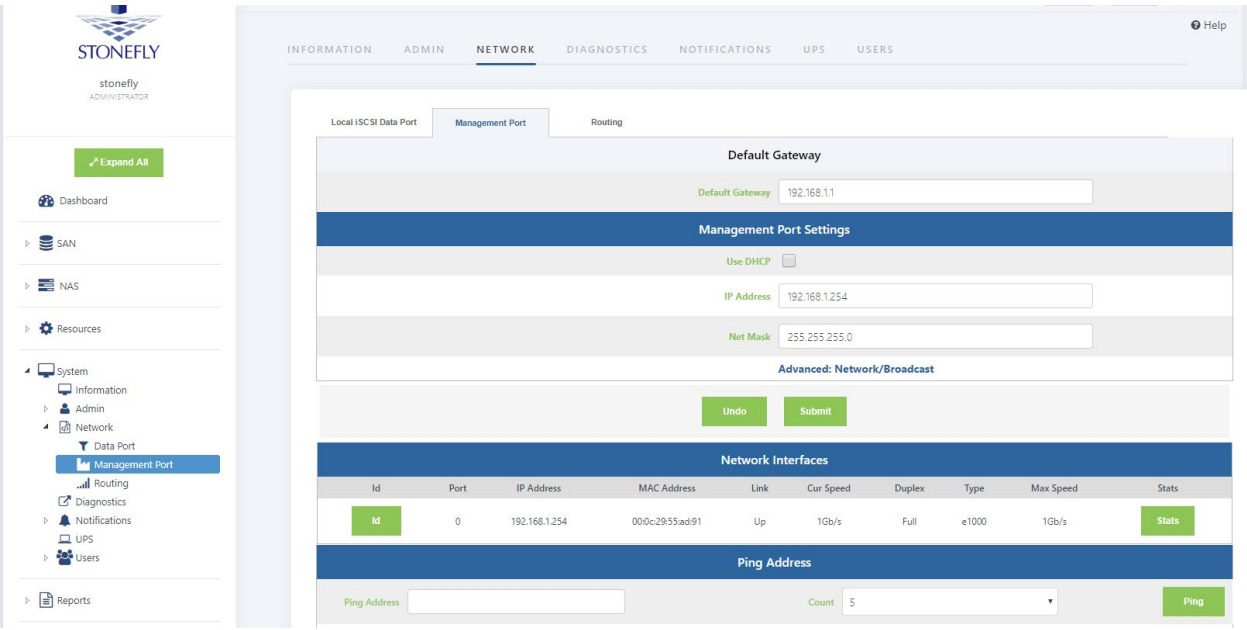

Figure 14: StoneFusion Management Port Settings Screen

20. Enter the **Default Gateway** setting.
21. Enter the **IP Address** for the Management port.
22. Enter the **NetMask** setting for the Management port. It is not necessary to select a Management Port as on the Local iSCSI Port screen. There is only one port assigned for this purpose.

The *Voyager* automatically configures the Network and Broadcast settings based on the IP address and Netmask settings. Click on the **Advanced: Network/Broadcast** link to view or modify the Network and Broadcast settings. For more information refer to "Chapter 2: Administrative Interface" in the Storage Concentrator User's Guide.

Changing the IP address of the Management port will cause your browser to lose its connection to the Voyager. To access the *Voyager*, set your browser's URL to point to the new IP address.

23. Click **Submit**. The following popups will appear.

Depending on the speed of your browser connection, you may not see this screen. Your changes will still take effect, however you will need to manually set your browser's URL to point to the new IP address.

 © StoneFly Inc. | All rights

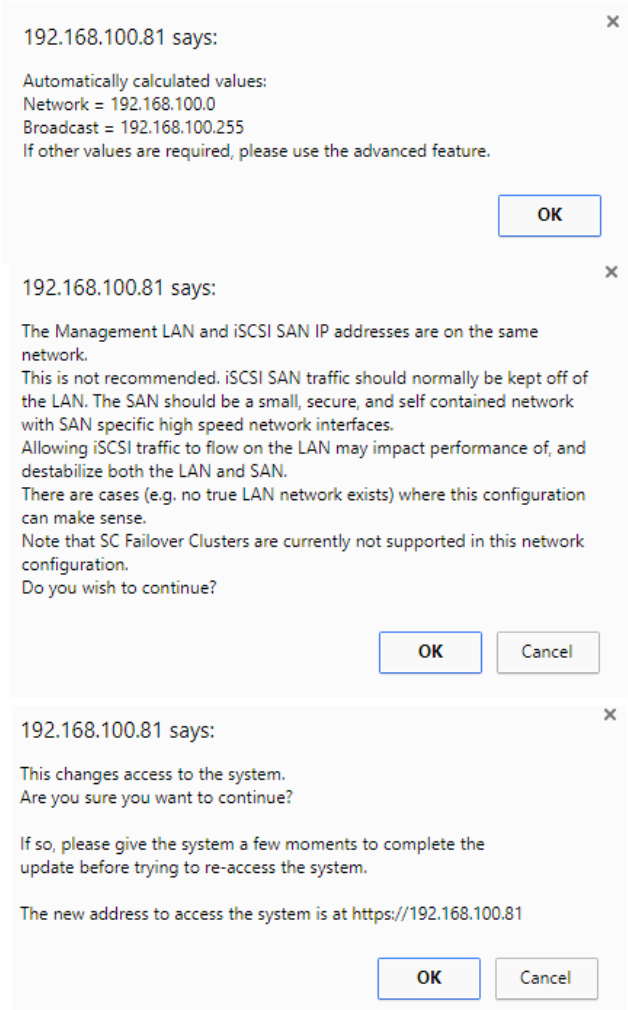

Figure 15: System Management GbE Port Change Screen

24. Click on **Ok** to continue.
25. Click on the new IP address to confirm the change to the Management Port setting.

4.7 Setting up Routing

To access a host on other networks, routing information to those networks must be configured in the System Management Network Routing screen. A route must be added if the host has a network setting that is different from the one listed in the iSCSI Host GbE Port Settings screen.

For example, if the *Voyager* network setting is 26.34.128.50 and the host network setting is 106.39.212.6, a route to the host must be configured.

 © StoneFly Inc. | All rights

To configure the routing information, use the steps that follow:

1. Navigate to **System > Network > Routing**. The Routing screen will appear.

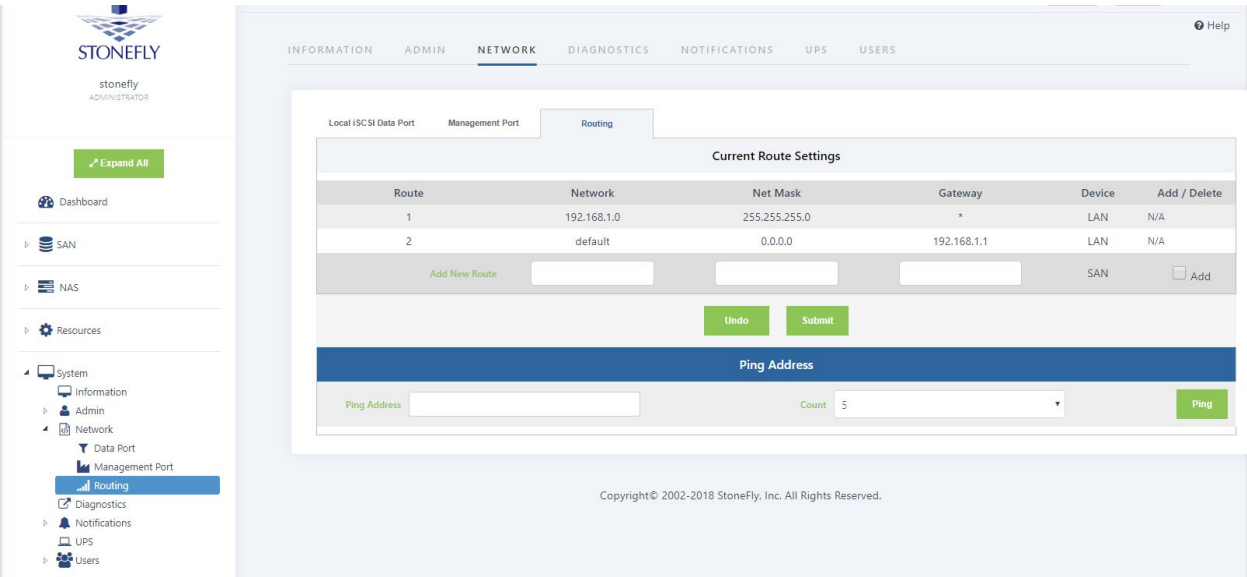

Figure 16: StoneFusion Management Network Routing Screen

2. In the **Add New Route** fields, enter the **Network**, **Netmask**, and **Gateway** settings for the new route.
3. Click the **Add** check box.
4. Click **Submit**.
5. Navigate to **Admin > General**. The System Admin screen will appear. The *Voyager* must be rebooted for the new routing settings to be recognized.
6. Click **Reboot**.

4.8 Confirming Setup

It is important to confirm that the Voyager is configured properly to communicate on your network before completing the configuration process covered in the "Administrative Interface" chapter of the Storage Concentrator User's Guide.

To confirm that the Voyager is configured properly, do the following:

1. Launch your web browser. In the URL address field, type the IP address you set up for the Management GbE port during the configuration process. Be sure to include https:// in the address.

The browser will display an alert regarding the security certificate for the site. This occurs because the IP address for the *Voyager* was changed from the factory default to one appropriate for your network.

Follow the screen prompts to accept the certificate. The number of screens will vary depending on which browser you are using. When the security certificate is accepted, the *Voyager* administrative interface login screen will appear.

If the administrative interface login screen does not appear, repeat the steps listed in "Configuring the Network Settings" on page 19.

2. Click **System** and then **Network** to confirm the network settings.
3. Click **Data Port** and confirm the settings.
4. Click **Management Port** and confirm the settings.
5. Click **Routing** and confirm the settings.

4.8.1 Steps to Complete Before Setting Up the System:

Read the Release Notes thoroughly. These can be found in your documentation CD.

Verify that your Host Initiators are at the most current revision levels. For example, if you are using the Microsoft Windows iSCSI Initiator, obtain the latest version from Microsoft.

Refer to Appendix 7: System Considerations in the Storage Concentrator User's Guide and make sure that you set up your servers according to the instructions in that section before connecting or using your StoneFly Voyager Appliance.

CAUTION: Not setting up your systems according to those instructions will cause timeouts and SAN disconnections.

4.9 Attaching and Removing the Front Bezel

Follow the below steps when attaching or removing the front bezel of the StoneFly Voyager:

- Attach the front bezel after initial installation is completed. This will help prevent damage to the drives during everyday use. The cover snaps on and off easily and can be removed as needed.
- To install the cover, gently press to snap the cover into place.
- To remove the cover, gently pull the cover towards you to remove it from the front panel.

© StoneFly Inc. | All rights

Chapter-5: Troubleshooting

© StoneFly Inc. | All rights

Refer to the following table for helpful hints on solving some of the most common problems. If you cannot find a resolution to your problem here, contact StoneFly. Call 510.265.1616 and select support from the menu.

Problem	Possible cause	Solution
The *ISC* administrative interface is not accessible from the computer.	The computer is not on the network.	Ensure that the computer is running a supported browser and is on the same network or subnet as the *ISC*.
	An incorrect IP address was typed in the address line of the browser.	Try the following: • Verify and retype the IP address in the browser. • Make sure the IP address begins with **https**. The IP address does not begin with http.
	Incorrect network settings were entered during installation.	For the correct settings, see "Configuring the Network Settings" on page 18.
	The network cable is not properly connected to the computer or the *ISC*.	Try the following: • Check all network cable connections. • Make sure the network cable is not damaged.
The *ISC* cannot be configured using the factory- supplied IP address.	The cable is not a network crossover cable.	Use a network crossover cable.
	The network crossover cable is plugged into the incorrect port on the back of the *ISC*.	Plug the network crossover cable into the Management Gigabit Ethernet (GbE) port on the back of the *ISC*. See, "Configuring the Network Settings" on page 18.

 © StoneFly Inc. | All rights

	The computer is not configured to communicate in the 192.168.0.0 network.	Configure the computer to communicate in the 192.168.0.0 network.
The unit is beeping	-	Make sure that all the cables, specially the power cables are connected. Check to see if any of the disk drives has failed. Check to see if a power supply has failed.
When I power the system on, I get a message "No Operating system found". What should I do?	-	Navigate to the BIOS settings and set your OS disk as first boot device. If it still does not work, contact StoneFly Support.

To access the administrative interface, use the steps that follow:

1. Launch your web browser.
2. Type the IP address for the Management Port of the *Storage Concentrator* in the address field of the browser.

The address field in the browser must include https:// to access the administrative interface.

 © StoneFly Inc. | All rights

This page is intentionally left blank.

Appendix-1: Glossary

© StoneFly Inc. | All rights

Access Control List (ACL)

A list that controls which hosts have access to which volumes. When a host attempts to log in, the *Storage Concentrator* requests authorization and allows access based on the list.

Access Path

The route used by a computer to communicate with a storage device. The path accesses the host bus adapter, host storage interconnection controller and logical unit. Some configurations support multiple access paths to a single device.

Administrative Interface

The graphical administrative interface is accessed from a computer on the network via a web browser. The following functions are available through the interface: *Storage Concentrator* discovery, physical resource management, storage pool management, logical volume management, target management, Access Control List management (ACL), system management, session management.

Adaptive Load Balancing

A feature that allows for more than one networking path providing port FailOver protection, as well as increased bandwidth. If one port goes down, the other port automatically accepts the additional load. There is no interruption in server operation, and a network alert is generated to inform IT staff of the problem.

Application Programming Interface (API)

The interface used by an application program to request services; usually denotes interfaces between applications and the software components that comprise the operating environment (e.g., operating system, file system, volume manager, and device drivers).

Array or Array Configuration

A storage array, i.e., a disk array or RAID array.

1. Assignment of the disks and operating parameters for a disk array. Disk array configuration includes designating the member disks or extents of the array and the order in which they are to be used, as well as setting parameters such as stripe depth, RAID model, cache allowance, spare disk assignments.

2. The arrangement of disks and operating parameters that result from such an assignment.

Asynchronous I/O Operation

An I/O operation whose initiator does not await its completion before proceeding with other work. Asynchronous I/O operations enable an initiator to have multiple concurrent I/O operations in progress.

 © StoneFly Inc. | All rights

Asynchronous Mirroring

Transactions that maintain synchronization for logical volumes occur in a batch rather than real-time mode. An asynchronous mirroring is desired when mirrored logical volumes are separated by distance in order to reduce the effects of distance-induced latency. It is also desirable to use Asynchronous Mirroring or replication to reduce the bandwidth requirements of the network connection.

Backup

1. (noun) A collection of data stored on non-volatile (usually removable) storage media for purposes of recovery in case the original copy of data is lost or becomes inaccessible. The data is also called the backup copy. To be useful for recovery, a backup must be made by copying the source data image when it is in a consistent state.

2. (verb) The act of creating a backup.

Campus Mirrors

Mirror images that are behind the Secondary *Storage Concentrator*

CHAP

CHAP (Challenge Handshake Authentication Protocol) allows you to set a Password or "Secret" for as a gatekeeper for communication between a host initiator and a volume.

Clusters

You must have at least two *Storage Concentrators* to implement FailOver on an IP Storage. Multiple *Storage Concentrators* are known as a cluster. In a clustered pair there will be one Primary and one Secondary *Storage Concentrator*. A cluster appears as a single entity to hosts on the network.

Concatenation

A logical joining of two series of data, usually represented by the symbol "|". In data communications, two or more data are often concatenated to provide a unique name or reference (e.g., S_ID | X_ID). Volume managers concatenate disk address spaces to present a single larger address space.

Configuration

1. The process of installing or removing hardware or software components required for a system or subsystem to function.
2. Assignment of the operating parameters of a system, subsystem, or device. For example, disk array configuration includes designating the member disks or extents for the array, as well as setting parameters such as stripe depth, RAID model, and cache allowance.

 © StoneFly Inc. | All rights

3. The collection of hardware and software components and operating parameters for an operating system.

Controller

The control logic in a storage subsystem that performs command transformation and routing, aggregation (RAID, mirroring, striping, or other aggregation), high-level error recovery, and performance optimization for multiple storage devices.

Controller-based Array

A disk array whose control software executes in a disk subsystem controller. The member disks of a controller-based array are necessarily part of the same disk subsystem that includes the controller.

Database Management System (DBMS)

A set of computer programs with a user and/or programming interface that supports defining the format of a database, and creating and accessing the data. A database management system removes the need for a user or program to manage low-level database storage. It also provides security and assures the integrity of the data it contains. Database management systems may be relational (table-oriented) or object-oriented.

Data Transfer Rate

The amount of data per unit time moved across an I/O bus while executing an I/O load. For any I/O load, the data transfer capacity of an I/O subsystem is limited by its data transfer rate. For disk subsystem I/O, data transfer rate is usually expressed in MB/second (millions of bytes per second where 1 million is 10^6).

Detach Image

Detaching an image allows it to be mounted and used by other software applications. The most common usage is to make a backup copy of the detached image. The detached image retains the mirror volume information and can be rejoined at any time.

Disk Array

A set of disks from one or more commonly accessible disk subsystems, combined with a body of control software. The control software presents the storage capacity of the disk to hosts as one or more logical disks. When it runs on a disk controller, control software is often called firmware or microcode. Control software that runs on a host computer is usually called a volume manager.

 © StoneFly Inc. | All rights

A disk subsystem which includes control software with the capability to organize disks as disk arrays.

Disk Array Subsystem Disk Drive

A non-volatile, randomly addressable, writable data storage device. Subdivision of a disk drive, disk array, or RAID array.

Disk Partitions Distributed Lock Manager (DLM)

Software, hardware or a combination of hardware and software that prevents multiple writers from altering a data element simultaneously or in a fashion that would lead to data corruption.

Failed Over

A mode of operation for failure-tolerant systems in which a component has failed and its function has been assumed by a redundant component. A system operating in a failed-over mode that protects against single failures is not failure tolerant, since a failure of the redundant component may render the system unable to function. Some systems (e.g., clusters) are able to tolerate more than one failure; these remain failure tolerant until no redundant component is available to protect against further failures.

FailOver

The automatic substitution of a functionally equivalent system component for a failed one. FailOver automatically redirects user requests from the failed or down system to the backup system that takes over the operations of the primary system.

File Server

A computer whose primary purpose is to serve files to clients. A file server is a general-purpose computer capable of hosting additional applications or capable of only serving files. The server is also called a host.

File System

Software that imposes structure on the address space of one or more physical or logical disks so that applications may deal more conveniently with abstract-named data objects of variable size (files). File systems are often supplied as operating system components but are implemented and marketed as independent software components.

Graphical User Interface (GUI)

A user interface for intelligent devices that is characterized by pictorial displays and highly structured forms-oriented input.

 © StoneFly Inc. | All rights

Hardware-based

Functionality implemented in high-speed physical (digital) hardware components, such as logic gates, inside high-density field- programmable gate arrays (FPGAs) or application-specific integrated circuits (ASICs).

Host

A computer connected to storage; typically a server running applications or providing services that access and consume storage.

Host Bus Adapter (HBA)

An I/O adapter that connects a host I/O bus to the memory system of a computer.

Image

See Mirror Image.

Input/Output (I/O)

The process of moving data between the main memory of a computer system and an external device or interface such as a storage device, display, printer, or network connected to other computer systems. I/O is a collective term for reading or moving data into a computer system's memory, and writing, or moving data from a computer system's memory to another location.

Initiator

SCSI device (usually a host system) that requests an operation to be performed by another SCSI device, the target.

IOPS

Input/Output Per Second. It is the number of inputs and outputs or read/writes per second.

iSCSI

iSCSI is a protocol that enables the transmission of block-level SCSI data between storage devices and computers over a standard IP network. iSCSI combines Ethernet-based IP networking with the SCSI command set, the core command set used in all storage configurations.

iSCSI Client

A logical entity, typically a host, which includes at least one iSCSI Initiator.

 © StoneFly Inc. | All rights

iSCSI Initiator

A logical entity, typically within a host, that sends (iSCSI) SCSI commands to targets to be executed.

iSCSI Server

A logical entity, typically a storage controller or gateway, which includes at least one iSCSI Target.

iSCSI Target

A group of physical storage devices containing at least 1 Logical Unit Number (LUN).

iSNS

iSNS (Internet Storage Naming Service) is a discovery protocol that facilitates automated discovery, management and configuration of iSCSI devices on a TCP/IP network. In any storage network, hosts (initiators) need to know which storage resources (or targets) they can access. An Internet storage name server lets servers automatically identify and connect to authorized storage resources.

JBOD

Acronym for "Just a Bunch Of Disks." Originally used to mean a collection of disks without the coordinated control provided by control software; today the term JBOD most often refers to a cabinet of disks whether or not RAID functionality is present.

Live Volume

The volume that is being accessed by the host for normal operations. The data on this volume is complete and not accessed via pointers and/or data structures. The difference between a regular volume and a Live Volume is that the Live Volume has been Snapshot enabled.

Logical Device

A device presented to an operating environment by control software or by a volume manager. From an application standpoint, a logical device is equivalent to a physical one. In some implementations, logical devices may differ from physical ones at the operating system level (e.g., booting from a host-based disk array may not be possible).

Logical Partition Logical Unit

A logical partition is a segmentation of a logical volume.

Logical Unit Number (LUN)

The entity within a SCSI target that executes I/O commands. SCSI I/O commands are sent

 © StoneFly Inc. | All rights

to a target and executed by a logical unit within that target. A SCSI physical disk typically has a single logical unit. Tape drives and array controllers may incorporate multiple logical units to which I/O commands can be addressed. Each logical unit exported by an array controller corresponds to a logical disk. (Common practice uses the terms “Logical Unit” and “LUN” interchangeably, although this is not strictly correct).

A SCSI representation of a system drive on a given channel and target ID. An encoded three-bit identifier for the logical unit.

Logical Volume

An arbitrary-sized space in a volume group that can be used as an address space for a file system or as device swap space. Logical volumes behave like disk block devices, except that, unlike physical disk partitions, they can be dynamically grown, shrunk and moved about without rebooting an operating system or entering into a maintenance or stand-alone mode.

LUN Zoning

In Fibre Channel, several devices grouped by function or by location. All devices connected to a connectivity product may include configuration of one or more zones. Devices in the same zone can see each other; devices in different zones cannot. A fabric management service used to create logical device subsets within a Storage Area Network (SAN).

Mapping

Conversion between two data addressing spaces. For example, mapping refers to the conversion between physical disk block addresses and the block addresses of the logical disks presented to operating environments by control software.

Management Information Base (MIB)

In SNMP, a collection of data elements that define the device settings the *Storage Concentrator* can control and the information it can retrieve it from a storage device.

Local Mirrors

Mirrored images that are located behind the Primary Storage Concentrator.

Metadata

Data that describes data. In disk arrays, meta-data consists of items such as array membership, member extent sizes and locations, descriptions of logical disks and partitions, and array state information. In file systems, meta-data includes file names, file properties and security information, and lists of block addresses at which each file’s data is stored.

Mirroring

 © StoneFly Inc. | All rights

StoneFly Replicator™ software provides storage-independent replication that operates at the block level over an iSCSI network. Replicator supports local and remote replication and can operate synchronously or asynchronously.

StoneFly Mirroring™ synchronous mirroring feature supplies host-independent mirrored data storage that duplicates production data onto physically separate mirrored target images transparently to users, applications, databases, and host processors. Synchronous mirroring implies that the *Storage Concentrator* waits for a write-complete acknowledgment from all volumes before presenting a write completion status to the host.

Mirror Image

A mirror image contains an exact duplicate of all other images in a mirror volume. A mirror image is grouped with other mirror images to comprise a mirror volume (each mirror image contains a duplicate copy of the data). Mirror images can be either local mirrors or they can be campus mirrors. The size of the mirror image must be equal to the size of all other images in the mirror volume.

Mirror Volume

A Mirror Volume is composed of multiple mirror images. StoneFly Mirroring supports up to four mirror images in a mirror volume. The Mirror Volume is what the applications and hosts see as the storage device.

Mount Directory

Directory in any file system where the top directory of a descendent file system is mounted. The contents of the mount directory are the contents of the top directory in the mounted file system. If the mount directory is not empty before the file system is mounted, any existing files and directories in that directory as well as any descendent directories become invisible (and inaccessible) until the file system is unmounted.

Mount Point

Synonym for mount directory. The mount point is the location (directory) where a file system, known to the host system, is mounted. Usually defined in terms of which system the file system is mounted on and where on that system the file system is mounted.

Network Attached Storage (NAS)

A term used to refer to storage elements that connect to a network and provide file access services to computer systems. Abbreviated NAS. A NAS Storage Element consists of an engine, which implements the file services, and one or more devices, on which data is stored. NAS elements may be attached to any type of network. A class of systems that provide file services to host computers. A host system that uses network attached storage uses a file system device driver to access data using file access protocols such as NFS or CIFS. NAS systems interpret these commands and perform the internal file and device I/O

 © StoneFly Inc. | All rights

operations necessary to execute them.

Network File System

In NAS, a distributed file system and its associated network protocol originally developed by Sun Microsystems Computer Corporation and commonly implemented in UNIX systems, although most other computer systems have implemented NFS clients and/or servers. Abbreviated NFS. The IETF is responsible for the NFS standard.

Partition

1. Subdivision of the capacity of a physical or logical disk. Partitions are consecutively numbered ranges of blocks that are recognized by MS-DOS, Windows, and most UNIX operating systems.
2. Synonym for the type of extent used to configure arrays.
3. A contiguously addressed range of logical blocks on a physical media that is identifiable by an operating system via the partition's type and subtype fields. A partition's type and subtype fields are recorded on the physical media and hence make the partition self-identifying.

Primary Storage Concentrator

The *Storage Concentrator* that manages the mirror volume.

Promote Image

Promoting a mirror image makes it a stand-alone volume. The promoted volume does not retain any mirrored volume information but contains an exact copy of the data at the time of promotion. The new stand-alone volume is accessible to the hosts and can retain security information from the mirror volume.

Partitioning

Presentation of the usable storage capacity of a disk or array to an operating environment in the form of several logical disks whose aggregate capacity approximates that of the underlying physical or logical disk. Partitioning is common in MS-DOS, Windows, and UNIX environments. Partitioning is useful with hosts that cannot support the full capacity of a large disk or array as one device. It can also be useful administratively, for example, to create hard subdivisions of a large logical disk.

Path

The access path from a host computer to a storage device.

 © StoneFly Inc. | All rights

Physical Extent

A unit of storage space on a physical device containing a specific amount of storage space. A collection of physical extents is then managed by the StoneFly Volume Manager as a logical volume, and a group of logical volumes make up a volume group. Physical extents are the smallest manageable element in a logical volume that can be managed by the StoneFly Volume Manager. The kernel and file system then use standard disk or file-system blocks when writing or reading to and from.

Physical Volume

A physical device such as a disk drive or RAID sub-system that, usually together with other devices, is configured as a volume group for subsequent division into one or more logical volumes. Logical volumes can be of arbitrary size (in multiples of physical extent size), whereas the physical volume is defined by the physical storage boundaries of the actual recording media or recording surface area in the device.

Primary Storage Concentrator

A Primary *Storage Concentrator* is the *Storage Concentrator* in a cluster that has an active Web server for the Administrative Interface. The Primary *Storage Concentrator* configures the volumes and back-end sessions on the Secondary *Storage Concentrator(s)* within the cluster.

Port

An I/O adapter used to connect an intelligent device (node) to an I/O bus or network storage subsystems. Port is the synonym for the head end of a device I/O bus containing the arbitration logic.

Provisioning

The logical volume management services provided by the *Storage Concentrator* system create a centrally administered SAN infrastructure ideally suited for provisioning enterprise or departmental SAN, over an IP network.

Storage provisioning is the process of presenting a uniform and logical representation of physical storage resources transparent to the consumers of the storage (applications and users). Storage provisioning is not restricted by the type of storage, server platform or connection methodology. Storage provisioning dynamically maps data from the logical storage space required by applications to the actual physical storage space.

RAID

RAID is an acronym for Redundant Array of Independent Disks, a Firmware/hardware implementation of a disk array controller in which data is stored on disks in such a manner

 © StoneFly Inc. | All rights

as to improve performance and avoid data loss in the presence of a disk failure.

Raw Device / Raw Partition

A disk partition not managed by a volume manager. The term raw partition is frequently encountered when discussing database systems because some database system vendors recommend volumes or files for underlying database storage, while others recommend direct storage on raw partitions.

Reattach Image

A previously detached mirror image can be reattached to the original mirror volume. Reattaching a mirror image removes it as a stand-alone image volume and initiates a rebuild operation on the reattached image.

Rebuild

The process of creating a mirror image from an existing volume. The volume is duplicated onto the mirror image at the block level in its entirety.

Relational Database Management System (RDBMS)

An RDBMS is a type of database management system that stores data in the form of related tables. Relational databases are powerful because they require few assumptions about how data is related or how it will be extracted from the database. As a result, the same database can be viewed in many different ways.

An important feature of relational systems is that a single database can be spread across several tables

Resource (Physical Device)

A disk drive, RAID (Redundant Array of Independent Disks) subsystem or other mass storage device and the data–storing media it contains. Sometimes referred to as a physical volume.

Revert Mirror to Span

Reverting a Mirror to a Span converts the mirror volume to a regular spanned volume.

Rollback

In Snapshot, rollback is a disaster recovery feature that allows users to return to the last known “good” data point in the event of corruption, viruses, or lost files. Essentially, performing a rollback returns the Live Volume to the last good known state.

Scalability

Capable of being changed in size and configuration. It typically refers to a computer,

 © StoneFly Inc. | All rights

product or system's ability to expand.

Secondary Servers

A server attached to the Secondary *Storage Concentrator* has access to campus mirror images, however, it views them as a local virtual volume. A server attached to the Secondary *Storage Concentrator* can also have its own local mirror volumes. These volumes are accessible as campus mirrors from the Primary *Storage Concentrator*.

Secondary Storage Concentrator

Another *Storage Concentrator* in a campus configuration that presents mirror images to the primary *Storage Concentrator*. Either the Primary *Storage Concentrator* or the Secondary *Storage Concentrator* or both can be single units or FailOver clusters.

SES

SES is an acronym for SCSI-3 Enclosure Services. Provides a means of SCSI access to multiple devices within an enclosure.

Simple Network Management Protocol (SNMP)

SNMP is an IETF protocol for monitoring and managing systems and devices in a network. The data being monitored and managed is defined by a MIB. The functions supported by the protocol are the request and retrieval of data, the setting or writing of data, and traps that signal the occurrence of events.

Small Computer Storage Interface (SCSI)

SCSI is a collection of ANSI standards and proposed standards that define I/O buses primarily intended for connecting storage subsystems or devices to hosts through host bus adapters. Originally intended primarily for use with small (desktop workstation) computers, SCSI has been extended to serve most computing needs, and is arguably the most widely implemented I/O bus in use today.

Snapshot

A point-in-time copy of a Live Volume. Snapshots contain an image of the volume at the exact point in time that the snapshot was taken. Snapshots can be created nearly instantaneously. The snapshot volume appears to the host as if it was a regular logical volume.

Snapshot Fragmentation/ Total Fragmentation for All Volumes

These percentages represent the amount of the index table fragmentation on the volume selected as well as the total amount of fragmentation for all Snapshot volumes. These percentages have no relationship to disk fragmentation.

 © StoneFly Inc. | All rights

Snapshot Volume

A Snapshot Volume is a virtual volume that represents a point-in-time image of a Live Volume. The Snapshot Volume data is a combination of data from the Live Volume and data from the Snapspace.

Snapspace

Snapspace is storage space configured by the Storage Concentrator used to store the changed data for maintaining snapshots. This data space is not directly readable by hosts. For fault tolerance, the Snapspace can be mirrored.

Source

A place from which data is taken. The place from which the data is acquired is called the *source*, whereas the place it is sent to or moved to is called the destination or target.

Spanning

A volume that is created comprised of regions or sections of several physical devices.

Secondary Storage Concentrator

A Secondary Storage Concentrator is a redundant Storage Concentrator that can be assigned volumes and accept sessions from hosts for those volumes. The Secondary Storage Concentrator in the cluster will transparently (to the hosts) become the Primary Storage Concentrator in the event of a failure in the Primary Storage Concentrator. The original Primary Storage Concentrator's storage volumes are now managed by the new Primary Storage Concentrator.

Storage Area Network (SAN)

A storage area network (SAN) is a separate and specialized network whose primary purpose is the transfer of data among storage elements and between computer systems and storage elements. A SAN consists primarily of a communication infrastructure and a management layer. The communication infrastructure provides physical connections and the management layer organizes the connections, storage elements, and computer systems so that data transfer is secure and robust.

Storage Concentrator

The *Storage Concentrator* delivers iSCSI target volumes to hosts over TCP connections in an Ethernet network. Configuring and managing these iSCSI target volumes is accomplished using a browser-based graphical user interface (GUI) resident in the *Storage Concentrator*. Storage resources are connected to the *Storage Concentrator* through a parallel SCSI connection or other connections. The system administrator uses the graphical user interface to allocate blocks of storage to create the iSCSI target volumes and authorizes their use by individual host systems.

 © StoneFly Inc. | All rights

Target

Target is synonymous with destination, a target is a file, a device, or any type of location to which data is moved or copied. The target is the provider of storage.

Target Portal

An iSCSI communications gateway between a primary Storage Concentrator and a Secondary Storage Concentrator at a campus site. Once the target portal has been created, the system will recognize storage at the campus site as an available resource for creating secondary mirror images.

Volume Group

A volume group (also referred to as SPAN) is one or more separate physical devices (disk drives or RAID sub-systems) called physical volumes that are configured to form a single large storage area that is then divided into one or more separate storage areas of arbitrary size called logical volumes. Each logical volume can then be used as a separate storage space for file system or for raw data storage by specific applications; without being constrained by physical disk boundaries. This feature is useful in various situations such as creating large file systems that exceed the size of a single disk or disk array, creating two or more separate file systems on a single disk device and/or creating a number of file systems having dissimilar geometries. A Volume group is a management abstraction term. For example, management actions and policies are applied to volume groups.

 © StoneFly Inc. | All rights

StoneFly Inc.

www.stonefly.com
www.iscsi.com
26250 Eden Landing Rd,
Hayward, CA 94545, USA.
(510) 265 1616
support@stonefly.com